REPORT

Nelson City Council

Maitai Dam
Intermediate Dam Safety Review
2015

Tonkin & Taylor

ENVIRONMENTAL AND ENGINEERING CONSULTANTS

REPORT

Nelson City Council

Maitai Dam
Intermediate Dam Safety Review
2015

Report prepared for:

Nelson City Council

Report prepared by:

Tonkin & Taylor Ltd

Distribution:

Nelson City Council	1 pdf copy
Tonkin & Taylor Ltd (FILE)	1 copy

May 2015

T&T Ref: 24480.9000

Table of contents

Appendix A:	Relevant Drawings
Appendix B:	Piezometer, standpipe and seepage records
Appendix C:	Piezometer limits
Appendix D:	Diver report

Executive summary

Tonkin & Taylor (T&T) have been engaged by Nelson City Council (NCC) to undertake the 2015 Intermediate Dam Safety Review (IDSR) of Maitai Dam. This report covers the period from 1 April 2014 to 31 March 2015 and incorporates the results of an inspection of the dam and a review of the monitoring results from the relevant period. The dam was inspected on 10 and 13 March 2015.

No significant events occurred during the monitoring period. However, during the writing of this report a 6.2 magnitude earthquake occurred on 24 April 2015. A "Special" inspection was carried out by NCC following the earthquake and the monitoring data recorded following the earthquake has been reviewed with no significant change to water levels or flow rates noted. This data will be reported on in full, including updates of the data plots, in next year's IDSR.

In general the Maitai Dam continues to perform satisfactorily with no significant safety issues noted. The following provides a summary of the current condition of the dam elements (the terminology used below for current condition is defined in Section 1.1 and 10):

Summary of dam condition

Dam Element	Current condition	Comments
Embankment	Satisfactory	
Service Spillway	Satisfactory	
Auxiliary Spillway	Satisfactory	
Intake Tower	Satisfactory	
Culvert	Fair	Seepage through culvert joints.
Internal Pipework & Valves	Fair	Some corrosion and maintenance issues.
External Pipework	Satisfactory	
Control Building	Satisfactory	
Mixing Chamber	Satisfactory	

As can be seen above, overall the key structures of the Maitai Dam are in fair to satisfactory condition and are therefore expected to "fulfil their original functions", generally with maintenance recommended to improve performance.

No significant dam safety issues are evident from our inspection or subsequent data evaluation.

Eight new dam safety recommendations were made as part of this IDSR, relating mainly to procedures and the upcoming Dam Safety Scheme (yet to be implemented).

Summary of 2015 Recommendations

No.	Recommendation	Refer Section
DSR 2015 - 1	Classify Maitai Dam (and other Classifiable dams owned by NCC) and lodge classification(s) with regional authority within 3 months of the Building (Dam Safety) Regulations coming in to force.	1.5.2.2

No.	Recommendation	Refer Section
DSR 2015 - 2	Prepare a dam safety assurance programme for audit by a recognised engineer, to be submitted to the regional authority within 1 year of lodging classification for Maitai Dam.	1.5.2.2
DSR 2015 - 3	Review and update OM&S manuals to ensure all flow measurement procedures are up to date.	2.3
DSR 2015 – 4	Collect and provide daily rainfall data.	2.5
DSR 2015 – 5	Review drawdown procedures involving screen removal, including in an emergency and update OM&S manual as needed.	5.1
DSR 2015 – 6	Review and update OM&S manuals to ensure all valves are included in operating procedures in relation to dam safety.	6.2
DSR 2015 – 7	Provide a summary of valve operation annually as part of the IDSR.	6.2
DSR 2015 - 8	Review and update OM&S manuals to ensure all flow measurement procedures are up to date.	6.4

It is noted that documentation may need to be revised to meet the expected requirements of a dam safety assurance programme (DSAP) required under the Dam Safety Scheme.

In addition there are numerous outstanding dam safety and asset management recommendations from previous Comprehensive Safety Reviews and Intermediate Safety Inspections. These are summarised in Section 11.

1 Introduction

Tonkin & Taylor Ltd (T&T) have been engaged by Nelson City Council (NCC) to undertake the 2015 Intermediate Dam Safety Review (IDSR) of Maitai Dam.

The IDSR inspection of Maitai Dam was undertaken on 10 and 13 March 2015, by Neville Laverack and Alex Evans (T&T), together with Alan Tolland from Nelson City Council (NCC) and Trevor Ruffell (Fulton Hogan Ltd – on site caretaker). The weather for the inspection on both days was overcast to fine. At the time of inspection the reservoir was just below primary spillway crest level.

The dam was last inspected in April 2014 by T&T as part of the 2014 Intermediate Safety Inspection and in January 2014 by Damwatch as part of their Comprehensive Safety Review (CSR). Observations and recommendations from the latest inspection are given in the sections that follow as well as a summary of outstanding recommendations from previous inspections in Section 11.

1.1 Objectives and scope

The purpose of an annual (intermediate) inspection is defined in NZSOLD Dam Safety Guidelines 2000 as "*the confirmation of satisfactory behaviour or identification of deficiencies by visual identification of the dam and review of surveillance data against prevailing knowledge*."

This inspection forms part of the regular surveillance in place for Maitai Dam as covered in the Operation and Maintenance Manual.

A new version of the NZSOLD Dam Safety Guidelines was released to NZSOLD Members on 18 May 2015. The latest revision provides more clarity and prescription to the annual inspection process.

The inspection focuses on safety issues as relating to safety of the asset, although recommendations relating to maintenance and operations are given as appropriate.

This inspection and review will be referred to as an Intermediate Dam Safety Review (IDSR).

The terms and meanings used to describe the current condition of the scheme features are presented in Table 1-1.

Table 1-1: Terms and meanings used to describe condition of scheme features

Term	Meaning
Satisfactory	The feature is expected to fulfil its intended function until the next inspection.
Fair	The feature is expected to fulfil its intended function under normal loading conditions until the next inspection, but maintenance is recommended. Infrequent hydrological and/or seismic events could result in a dam safety deficiency.
Poor	The feature may not fulfil its intended function; maintenance is necessary.
Unsatisfactory	The feature is not expected to fulfil its intended function; repair, replacement, or modification is necessary.

Notes: Bold text is used to identify the use of the above terms in the body of this report. Terms and definitions are adopted from USBR recommendations on inspection documentation[1].

[1]US Bureau of Reclamation, Safety Evaluation of Existing Dams Course Notes, Session 7, "Inspection Planning and Documentation", March 2012.

1.2 General description and key characteristics

Maitai Dam is a 39 m high earthfill embankment located on the North Branch of the Maitai River, approximately 18k m south-east of Nelson. The dam, constructed in 1986, is owned by NCC and is used for water storage supply for the Nelson City. Appurtenant structures include a low level culvert, intake tower, concrete service spillway and auxiliary overland flow (fuse plug) spillway.

Maitai Dam has a High Potential Impact Classification (PIC) in accordance with the New Zealand Society on Large Dams (NZSOLD) Dam Safety Guidelines 2014. The recent CSR (Damwatch, 2013) concurred with the PIC rating.

Key characteristics of Maitai Dam are summarised in Table 1-2 below.

Table 1-2 Maitai Dam Key Characteristics

Parameter	Value
Date of construction	1986
Owner	Nelson City Council
Operator	MWH and Fulton Hogan
Crest level	RL 177.0 m
Dam height	39 m
Crest width	6.1 m
Crest length	160 m (approx.)
Upstream Slope	2.6H:1V
Downstream Slope	2.1H:1V with mid-height berm at R.L. 155 m
Chimney drain level	RL 175.0 m
Spillway crest level	RL173.75 m
Spillway crest width	20 m
Fuse plug crest level	RL 175.61m
Fuse plug sill level	RL 175.18 m
Fuse plug width	20 m
Reservoir capacity at spillway crest level	4,150,000 m^3
Potential Impact Classification	High[1]

Note 1: PIC in accordance with NZSOLD Dam Safety Guidelines 2000.

1.3 Background and general

Day-to-day operation of the Maitai Dam and associated facilities became the responsibility of the Joint Venture between MWH and Fulton Hogan, with effect from 1 July 2004 on behalf of NCC. The joint venture employs a full-time on-site caretaker, Trevor Ruffell.

The following selection of drawings and figures are provided in Appendix A:

- Plan of the dam and seepage measurement and standpipe locations,
- General schematic of the dam and water supply headworks,
- Internal drainage plan and details,

- Instrumentation layout and details,
- Cross-section through the embankment at the culvert location,

Instrumentation readings and inspections have been undertaken regularly throughout the year. Summaries of instrumentation readings and plots are presented in Appendix B. Piezometers were last de-aired (flushed) in October 2013 (T&T ref 24480.73).

Commercial Diving Consultants Ltd last carried out inspection and repairs to the intake tower in March 2015. Their report is provided in Appendix D.

The dam inspection generally progressed in the following manner:

1. Control house, pipes and valves,
2. Culvert beneath the dam to the bottom of the intake tower,
3. Outdoor discharge valves,
4. Downstream end of service spillway,
5. Mid height downstream berm,
6. Mixing chamber,
7. Service spillway,
8. Dam crest, including upstream face of the dam viewed from the dam crest.
9. Right abutment.
10. Left abutment.
11. South Branch Intake weir and associated structures.
12. Fuse plug spillway.
13. Reservoir margins, upstream embankment armour and intake tower by boat.

Dam Safety and Asset Management (AMR) recommendations are made throughout the report. *Recommendations are in italics*. All recommendations are summarized in Section 11.

1.4 Changes in legislation

Two recent key pieces of legislation that need to be considered with respect to dams are the Building Amendment Act 2013 and the Dam Safety Scheme.

The key requirements of the Building Amendment Act 2013 act already in force are referenced on the MBIE[2] website: http://www.dbh.govt.nz/dam-safety#inforce.

A 'Large dam' is now defined as a dam that is 4 or more metres in height and holds 20,000 cubic metres or more of fluid. This was previously 3 or more metres in depth.

The dam safety scheme is currently scheduled to commence on 1 July 2015. However, we note that the implementation has been delayed several times already and we understand the Minister for Business, Innovation and Employment is currently considering options for modifying aspects of the Building (Dam Safety) Regulations, including possible transfer of this function to the Resource Management Act.

The dam safety scheme is "a risk management regulatory regime for dams in New Zealand. It is prescribed under the Building Act 2004 (the Act) and the Building (Dam Safety) Regulations 2008

[2] Ministry of Business, Innovation and Employment. This Ministry replaces the previous Department of Building and Housing (DBH).

(the Regulations)". The dam safety scheme applies to all dams that are classifiable, and all referable dams that become classifiable.

A "classifiable" dam has:

- a maximum height of 8 m or more and a potential storage volume of 20,000 m^3 or more; or
- a maximum height of 4 m or more and a potential storage volume of 100,000 m^3 or more.

A "referable" dam has a maximum height of 4 m or more or has a potential storage volume of 20,000 m^3 or more.

The relationship between "large", "classifiable" and "referable" dam criteria is illustrated in Figure 1-1 below.

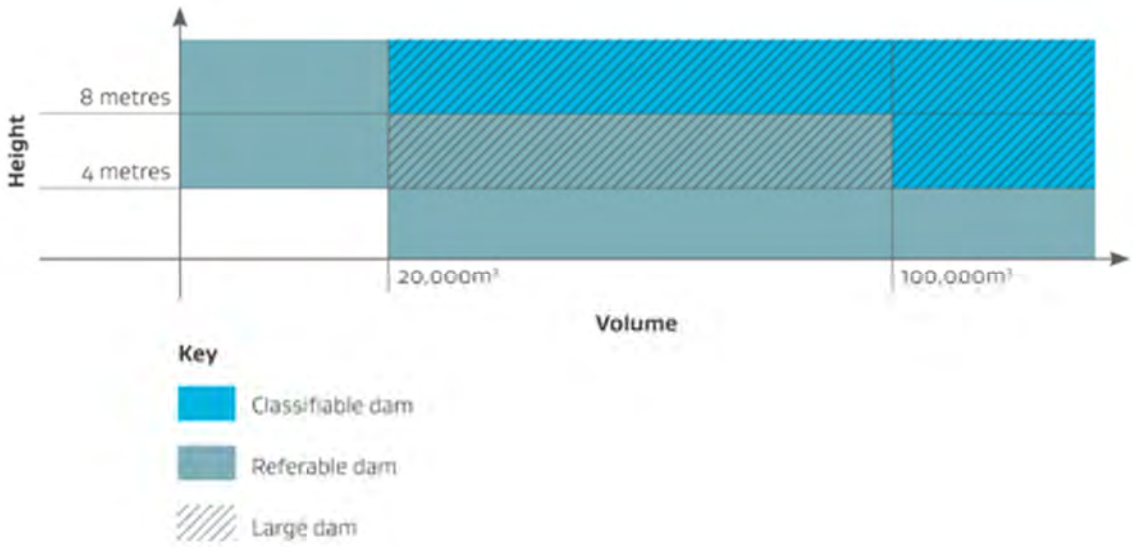

Figure 1-1: Illustration of relationship between "large", "classifiable" and "referable" dam criteria

1.5 NCC responsibilities

1.5.1 Building Act

Maitai Dam meets the definition of a large dam.

Under the Building Act a building consent may also be required for modification to an existing large dam including appurtenant structures (i.e. spillways, intakes/outlets). We recommend seeking technical advice if NCC are considering modifying any aspects of Maitai Dam or its appurtenant structures.

1.5.2 Dam Safety Scheme

1.5.2.1 General

Maitai Dam meets the definition of a classifiable dam.

Table 1-3 and Table 1-4 outline what owners of classifiable dams and owners of Medium and High Potential Impact dams must undertake in accordance with the Dam Safety Scheme.

Table 1-3: Actions required of owners of classifiable dams

Action required	Timeframe[1]
Notify your regional authority of your dam's size and location.	Within 3 months of the Building (Dam Safety) Regulations coming in to force (or within three months of dam being commissioned).
Classify the dam as a low, medium or high potential impact dam, and provide the classification to your regional authority.	Within 3 months of the Building (Dam Safety) Regulations coming in to force (or within three months of dam being commissioned).

Note 1: Timeframe for implementation of dam safety scheme is still subject to final approval by Minister of Business, Innovation & Employment.

Table 1-4: Actions required of owners of medium and high potential impact dams

Action required	Timeframe[1]
Prepare a dam safety assurance programme (DSAP), and submit it to a recognised engineer for audit.	For a high potential impact dam: within 1 year of classification. For a medium potential impact dam: within 2 years of classification.
Provide the DSAP and a certificate from the recognised engineer to your regional authority.	
Provide an annual dam compliance certificate to your regional authority.	On each anniversary of the approval of your dam's DSAP.

Note 1: Timeframe for implementation of dam safety scheme is still subject to final approval by Minister of Business, Innovation & Employment.

The Building (Dam Safety) Regulations 2008 state that *"A dam safety assurance programme must:*

a) be consistent with the dam safety management principles related to operation, maintenance, surveillance, and emergency action planning as provided in the New Zealand Dam Safety Guidelines (published by the New Zealand Society on Large Dams, November 2000); and

b) be appropriate to the type and size of the dam and the dam classification given to the dam.

Every dam safety assurance programme must contain the following:

a) requirements for and frequency of surveillance, routine visual inspections, instrument monitoring, data evaluation, and reporting to the dam owner

b) requirements for annual dam safety reviews

c) requirements for comprehensive dam safety reviews

d) details of an emergency action plan

e) requirements for inspection of appurtenant structures, including testing of gates and valves that contribute to reservoir safety

f) procedures for the investigation, assessment, and resolution of dam safety deficiencies."

1.5.2.2 Specific NCC obligations

Under the Dam Safety Scheme, for a High Potential Impact Classification, NCC would have to notify their regional authority of their dam(s) size (dam height and stored volume) and location,

and then formally classify the dam in accordance with the Building (Dam Safety) Regulations 2008 Schedule 1.

Under the current draft of the Dam Safety Scheme, a dam safety assurance programme would be required for Maitai Dam, as well as annual compliance certification.

This also applies to any other Medium or High PIC dams NCC owns. Note that the timing requirements in the following recommendations may change if MBIE delay the implementation of the Dam Safety Scheme beyond the currently notified date of 1 July 2015.

DSR 2015 - 1 Classify Maitai Dam (and other Classifiable dams owned by NCC) and lodge classification(s) with regional authority within 3 months of the Building (Dam Safety) Regulations coming in to force.

DSR 2015 - 2 Prepare a dam safety assurance programme for audit by a recognised engineer, to be submitted to the regional authority within 1 year of lodging classification for Maitai Dam.

2 Dam instrumentation

2.1 General

The monitoring results for the period since the last inspection, 1 April 2014 to 31 March 2015, have been reviewed and are discussed in the following sections. Summaries of the results are provided in Appendix B.

The reservoir level was just above the service spillway crest level at the time of inspection. The results indicate that the reservoir level has fluctuated between RL 172.56 m and RL 173.93 m (a range of 1.37 m) during the last period. The median reservoir level was RL 173.78 m compared to the service spillway crest level of RL 173.75 m.

2.2 Significant events

No significant events occurred during the monitoring period. However, during the writing of this report a 6.2 magnitude earthquake occurred on 24 April 2015. The earthquake was centred 35 km south-east of St Arnaud, which is approximately 75 km south of the dam. A "Special" inspection was carried out by NCC following the earthquake and the monitoring data recorded following the earthquake has been reviewed with no significant change to water levels or flow rates noted. This data will be reported on in full, including updates of the data plots, in next year's IDSR.

2.3 Piezometers

The upper limits for the hydraulic piezometers were reviewed in 1999 as recommended in the 1998 Safety Review Report, and are repeated in Appendix D.

Piezometer flushing (de-airing) was last undertaken by Liam Arundel of T&T in October 2013. The results of the de-airing were reported in T&T report dated April 2014 (T&T ref. 24480.73). Further comment was also made in the 2013 CSR, including the endorsement of current recommendations to continue to routinely review the data and de-air as required.

Data provided by NCC, including rainfall, reservoir level and piezometer plots are included in Appendix B, Plots 1 to 5.

The hydraulic piezometer readings continue to demonstrate performance that is generally consistent with expectations based on past performance. Most piezometer's readings have remained relatively consistent over the period, with operating ranges generally within the ranges of the previous five years.

The following piezometer observations are noted:

<u>Instrument Line 1 (Plot 1, Appendix B)</u>

- P1, P2 (upstream foundation piezometers) and P9 (downstream) continue to approximately mirror reservoir level.
- P4 (downstream) recorded its highest reading of RL 144.9 m (1.4 gauge reading) since the reservoir was filled in 1987 exceeding the trigger level of RL 143.5 m (0.0 gauge reading). The spike coincided with a high monthly rainfall of 357 mm. The readings have since returned to normal.
- P5 (downstream foundation piezometer) is continuing to trend upwards, with all readings since August 2014 exceeding the trigger level of RL 140.0 m (-3.5 gauge reading). P5 is known for its sensitivity to air (refer Piezometer limits comments in Appendix D). We also note that the original limit set in the Operations and Maintenance Manual was RL 147 m,

with the lowered limit of RL 140 m being adopted at a later stage based on data trends rather than direct safety concerns. Therefore, exceedance of this lower limit in isolation, is not, in itself, cause for alarm. It is noted that the de-airing undertaken in October 2013 resulted in an immediate response from P5 with a drop of piezometric level of approximately 4 m recorded. The trend confirms that this instrument is performing poorly and is unlikely to give reliable results. Further review should be undertaken as to whether this instrument should be more frequently deaired or if sufficient coverage is obtained from other instruments (Refer recommendation DSR2015-3 below)

- P7 (downstream foundation piezometer) exceeded the trigger level of RL 138 m (-5.5 gauge reading) by up to RL 0.2 m on four occasions during the monitoring period. No documentation was seen to demonstrate that any action was taken as a result of these trigger level exceedances. The readings are however within historical limits. While infrequent exceedances, in isolation, do not necessarily constitute a dam safety issue, they should continue to be monitored on a monthly basis to determine if action needs to be taken.
- P8 (upstream) recorded its highest reading of RL 173.9 m (30.4 gauge reading) since the reservoir was filled in 1987, however, this is below the trigger level of RL 174 m (30.5 gauge reading). The readings have subsequently reduced to more typical levels but should continue to be closely monitored in case the instrument starts to trend upwards more frequently to the trigger level.
- P23 (downstream) experienced a small spike on 01 June 2014 before returning to normal. Upon reviewing the surrounding data it is apparent that the most likely cause for this is incorrect entry of the data (28.3 m entered rather than 26.3 m). The data spike is unlikely to be a true piezometer reading and the data has been manually corrected to reflect this.

<u>Instrument Line 2 (Plot 2, Appendix B)</u>

- P10 (upstream foundation piezometer) continues to approximately mirror reservoir level.
- A data spike is evident in P11 (upstream foundation piezometer) on 01 June 2014, where an apparent reading 10 m greater then neighbouring readings was entered. Upon reviewing the surrounding data it is apparent that the most likely cause for this is incorrect entry of the data (28.9 m entered rather than 18.9 m). The data spike is not considered to be the true piezometer reading and the data has been manually corrected to reflect this.
- P12 (downstream foundation piezometer) continues to rise following de-airing in October 2013. The trend confirms that this instrument is performing poorly and is unlikely to give reliable results.
- P14 (downstream) appears to have been reasonably consistent over the past monitoring period with trigger level exceedances comparable to the last period. While these infrequent exceedances, in isolation, do not necessarily constitute a dam safety issue, they should continue to be monitored on a monthly basis to determine if action needs to be taken.

<u>Instrument Line 3 (Plot 3, Appendix B)</u>

- P16 (upstream foundation piezometer) and P20 (downstream) continue to approximately mirror reservoir level.
- P19 (downstream) recorded its highest reading of RL 156.5 m (30.0 gauge reading) since the reservoir was filled in 1987, however, this is below the trigger level of RL 156.8 m (30.3 gauge reading).
- As expected the de-airing of P21 (downstream foundation piezometer) has only had a short term impact and readings have increased steadily over most of the monitoring period.

- P27 (downstream) appears to have been reasonably consistent with a range of only 100 mm during the last period (RL 170.1 to 170.2 m). However, the current trigger limit is RL 170.2 m (26.0 gauge reading), so even this small deviation from normal has resulted in trigger level exceedance. As noted below, we recommend review of trigger levels to more accurately reflect data trends and design limits.

DSR 2015 - 3 Review P5 de-airing requirements and criticality.

Given the repeated exceedances of trigger levels, we reiterate the recommendation to review the appropriateness of instrument trigger levels and update as required. This review should be undertaken after evaluation of potential failure modes, and piezometer assessments (CSR recommendation 2013-5, 11 and 12a).

2.4 Standpipes

A plot of the standpipe results are shown on Plot 4 in Appendix B. All standpipes continue to give generally consistent readings. SB2 appears to approximately mirror reservoir level. The peaks and troughs in the readings for SB1, SB3 and SB7 appear to follow the peaks and troughs of the monthly rainfall.

2.5 Seepage monitoring

Seepage flows in the monitored drains have generally followed the pattern of previous years, reflecting the generally constant full supply lake level. Overall, performance of the three collector drains during the past year has continued to be satisfactory.

In addition to routine monitoring, the three outflows, CC, LHC and RHC are monitored at shorter, daily, intervals during and shortly following periods of heavy rain. This is to establish whether there are any direct relationships between drain flows, rainfall and/or reservoir level.

No heavy rainfall data has been recorded for the 2014/2015 monitoring period. It is important to record daily rainfall together with lake level so that changes in instrument data can be interpreted with respect to lake level and rainfall (see recommendation DSR 2015 - 4 below.

The results discussed in the 2013 annual report reinforce the 2010 findings that the drains respond rapidly to high rainfall, and quickly stabilise over a few days. As noted in the 2010 annual inspection report (DSR 2010 – 6), all three outflows, CC, LHC and RHC, should continue to be monitored regularly, with increased monitoring during and following periods of heavy rain to capture the peak flows and further establish a relationship.

The following particular observations are made for the period ending 31 March 2015). Plot 5 Appendix B, includes seepage and rainfall data. Instrument locations are provided in Appendix A.

The relevant drains are the: Central Collector (CC) drain, Seepage Collector Outlet, Left Abutment Contact drain and the Right Abutment Contact drain. The responses of all the drains are summarised as follows:

- Central Collector: CC is the seepage collector outlet flow minus the left and right abutment contact drains. The maximum reading is acceptably within the overall range experienced since commissioning. Flows were reasonably consistent over the monitoring period except for a spike in July. The July reading of 2.4 l/s was considerably higher than the next highest reading for the last 5 years (1.4 l/s). It is noted that the high seepage flows coincided with a high monthly rainfall record. However, with the available data it is not possible to confirm if there was heavy rainfall shortly before the data reading (Refer DSR2015-4 below). We note that the data spike is well less than the trigger level of 14 l/s. Measured flows ranged between 0.38 l/s and 2.42 l/s (1.12 l/s, excluding the July spike) during the period.

- Seepage collector outlet (not shown on Plot 5): Flows between 0.38 l/s and 2.42 l/s (1.15 l/s, excluding July spike) are within the range since commissioning. All recorded flows continue to be well within the trigger limit of 14 l/s for the seepage collector drain.
- Left abutment contact drain (LHC): Readings have been relatively consistent over the last period with flows of up to 0.13 l/s recorded (well within the acceptable limit of 2 l/s).
- Right abutment contact drain (RHC): Readings have been relatively consistent over the last period with flows of up to 0.14 l/s recorded. These measured flows ("RHC" on Plot 5) are within the previous range of records and are less than the maximum acceptable flow of 2 l/s.

The measurement of the LHC and RHC flows has been recently automated as described in Section 6.4.

In addition to the above, the following comments are noted on the culvert exit area, interceptor and spillway underdrainage flows. These results are not presented in the appended plots and are provided for completeness.

- Culvert exit area flows: The right side drain flow varied from 0 to 0.5 l/s, well within the previous recorded range and the maximum allowable. Consistent with previous readings, the left side drain stayed dry.
- Interceptor drain in culvert: The interceptor drain has maintained relatively constant flow around 0.05 l/s, with the exception of a zero reading on 01 August 2014. The flows are comparable with previous readings and within the acceptable limit of 0.1 l/s.
- Spillway under-drainage flows: These have been generally consistent with prior observations, with some seepage being apparent from the apron area.

DSR 2015 - 4 Collect and provide daily rainfall data

2.6 Dam and spillway settlement survey

A deformation survey is performed typically every three years with the last survey in 2012. The trending survey results were discussed in the recent CSR (Damwatch, 2013). The CSR noted that "*the left abutment crest has settled more than the centre crest and right abutment crest. Evaluations of dam deformation should be made in the context of the dam's foundation geometry and features.*" CSR recommendations relating to the deformation surveys (CSR2013-17a and 17b) are presented in Section 11.1 for completeness.

A full deformation survey is due this year (2015). The results of this survey should be reviewed and commented on in the 2016 IDSR.

3 Embankment and abutments

3.1 Upstream face

The embankment and abutments were inspected from a walkover of the toe of the dam, the mid height downstream berm and the dam crest (Photograph 3.1 and Photograph 3.2). The upstream armour above the reservoir level was also visually assessed by boat (Photograph 3.3). The condition of the rip rap is comparable to last year with some "lean" patches to the right of the service spillway.

Minor vegetation growth within the armour was observed, but appears to be generally kept under control by routine maintenance in accordance with the OM&S.

Photograph 3.1 - Upstream armour viewed from crest adjacent to spillway with "lean" area at front

Photograph 3.2 - Upstream armour viewed from crest near right abutment.

Photograph 3.3 - Upstream face looking towards spillways as viewed from boat.

3.2 Downstream face and crest

The downstream dam face is in good condition and has good grass cover (Photograph 3.4). A runnel formed by the erosion of a sheep track was noted near the footpath next to the spillway (Photograph 3.5). This has since been filled and compacted with soil (Photograph 3.6). The berm drains were in good condition and well maintained.

Photograph 3.4 - Downstream dam face viewed from mid height berm.

Photograph 3.5 - Runnel in downstream dam face 10 March 2015.

Photograph 3.6 - Runnel filled and compacted with soil 13 March 2015.

Photograph 3.7 - Crest looking towards right abutment.

Photograph 3.8 - Mid height berm viewed from dam crest.

The crest track is in satisfactory condition with no sign of settlement, cracks or displacement (Photograph 3.7). The mid height berm has good grass cover (Photograph 3.8) and the access track is in good condition.

4 Spillways

4.1 Service spillway

4.1.1 Spillway crest and chute

The spillway was dry at the time of inspection (Photograph 4.1 and Photograph 4.2).

The reservoir level gauge on the spillway crest, noted to be in poor condition in the 2013 inspection, still requires repair.

Some patched areas of the spillway require further attention (Photograph 4.3 and Photograph 4.4). A few minor additional areas on the spillway were identified and marked with spray paint that require patching. We understand that Nelmac had been contracted to patch the spillway.

The trees and bushes along the right wall of the spillway chute have yet to be removed as per CSR recommendation 2013-10 (to minimise risk of wall damage from tree roots).

Photograph 4.1 - Service spillway from footpath.

Photograph 4.2 - Service spillway from footpath.

Photograph 4.3 - Section of patch has chipped away and requires re-patching.

Photograph 4.4 - Patch is starting to wear and requires smoothing.

4.1.2 Spillway flip bucket and armour

The spillway flip bucket and armour are in good working order (Photograph 4.5). The shields for the relief holes on the spillway apron are in good condition (Photograph 4.6 and Photograph 4.7).

The diver report (Appendix E) noted no change of armouring in plunge pool, no damage to concrete and no debris around the flip bucket and drain. The divers had also unblocked the drains for the spillway flip bucket enabling this to be inspected.

Photograph 4.5 - Service spillway flip bucket.

Photograph 4.6 - Service spillway apron and plunge pool.

Photograph 4.7 - Service spillway apron and plunge pool.

4.2 Auxiliary spillway

The auxiliary (fuse plug) spillway was inspected for overgrowth, surface erosion, slumps and obstructions and found to be satisfactory (Photograph 4.8). The downstream ground surface shows no sign of surface erosion. No evidence of rabbit burrowing was found during this inspection. The outlets of the overflow priming boxes were exposed and found to be generally satisfactory. The sand at the true right outlet (Photograph 4.9) is thought to be the same as that identified during the 2014 inspection.

Photograph 4.8 - Auxiliary spillway priming boxes.

Photograph 4.9 - Auxiliary spillway priming box outlets.

4.3 Security features

The safety fence erected between the service spillway and auxiliary spillway to limit access to the service spillway crest was in good condition.

The Spillway Bridge and handrails appeared to be in good condition. However, the gaps present in the handrail on the spillway road crossing bridge identified in the 2014 inspection (AMR2014-1) have not been fixed and remain a safety hazard to the public (not a dam safety issue).

5 Intake tower

Commercial Diving Consultants Ltd (CDC) are engaged to carry out repairs to the tower as requested by NCC. Inspection and maintenance was undertaken between 3 and 5 March 2015 (as reported in Appendix E).

CDC noted:

- All screens have been cleaned and repositioned.
- Random testing of the bolts has been carried out at all levels with no loose bolts reported.
- All flange bolts were checked and found to be tight. A small amount of pitting on the horizontal member was cleaned and sealed with epoxy.
- All bonding clamps are tight.
- No bolts were replaced this survey.
- 10 small pits on Level 5 were cleaned and filled with epoxy.
- Paint condition is the same as last survey. There are some areas where there is a small amount of pitting with paint loss and needs checking at the next annual inspection.
- Electrical bonding clamps are all tight.
- Recent repairs are in good condition with no signs of corrosion around them.

In addition approximately 250 mm of soft mud was removed from the valve chamber roof where it was pumped over towards the spillway.

Photograph 5.1 - Intake tower.

Photograph 5.2 - Cathodic protection meter as at 13 March 2015.

5.1 Screens and hoists

Screen and hoist condition continues to be addressed by regular inspection and replacement and recorded in the diver's inspection report (Photograph 5.3). It is understood that NCC have decided not to replace the screen winch. Draw down procedures, including during an emergency, should be reviewed to ensure that any operations involving screen removal or replacement are updated in the OM&S manual.

DSR 2015 - 5 Review drawdown procedures involving screen removal, including in an emergency and update OM&S manual as needed.

5.2 Bolt corrosion

Bolt corrosion continues to be addressed by regular inspection and replacement and recorded in the diver's inspection report. The 2015 diver inspection noted "*No bolts replaced this survey. There may be bolts & nuts required next survey on Level 3.*"

5.3 Superstructure

The netting to the ceiling of the tower structure was replaced around June 2005 (Photograph 5.4) and we understand from discussions with the Caretaker that it is in good condition.

Photograph 5.3 - Broken winch.

Photograph 5.4 - Intake tower bird netting in good order.

6 Culvert and pipework

6.1 Concrete culvert & valve chamber

The concrete culvert and valve chamber including lighting and ventilation were generally in good condition. Refer Appendix A for details of culvert layout. Condensation from the upper pipe was evident during the inspection (Photograph 6.1), with water dripping onto the top of the lower pipe and pooling on the floor beneath the pipes.

The concrete and joints appear in good condition.

Some specific comments made as follows:

- The culvert walls are essentially dry downstream of the interceptor drain.
- Joint sealant deteriorating and fines found behind sealant at some joints near middle of culvert (Photograph 6.2) – comparable to 2014 findings (refer DSR2013-8).
- Staining on walls in some locations (Photograph 6.3).
- Pipe brackets and bolts require general maintenance and corrosion repair in several locations.
- Corrosion and flaking paint evident on pipework in several places (Photograph 6.4 and Photograph 6.5). Some repair work has been completed (Photograph 6.6).
- The diversion channel above Culvert Section 6 pipe bracket appears to be working well (Photograph 6.7). Leakage below the bracket can now be seen (Photograph 6.8). The pipe below the bracket requires repainting (Photograph 6.9). This should be done as part of routine maintenance.

No hydrogen sulphide (HS) odour was noted in the 2015 inspection.

Seepage evident at the 2013 CSR and 2014 ISI on the lower step (adjacent to the culvert entrance) was also evident at the 2015 annual inspection as wet concrete and pooling of water (refer CSR2013-15).

Photograph 6.1 - Culvert looking upstream from the entrance.

Photograph 6.2 – Joint sealant deteriorating in several locations along the culvert.

Photograph 6.3 - Seepage and staining evident at several locations along true right wall of culvert.

Photograph 6.4 - Corrosion and flaking paint evident on pipework in several locations.

Photograph 6.5 - Corrosion and flaking paint evident on pipework in several locations.

Photograph 6.6 - Evidence of repair work on lower pipe.

Photograph 6.7 - Leakage diversion away from pipe bracket.

Photograph 6.8 - Leakage below diversion channel.

Photograph 6.9 - Staining of pipe below diversion channel.

The following areas were noted during the 2015 inspection of the valve chamber:

- The corrosion evident on the concrete anchor bolt heads on the upper walkway from the 2013 inspection remained unchanged.
- The air valves still require servicing and valve corrosion repair (to be serviced as part of routine maintenance).
- Flow from scour knife valve at the end of the walkway was relatively dry at the time of inspection, with the exception of condensation from the upper pipe. This is comparable with inspection findings in previous years.

Photograph 6.10 –Sluice valve

6.2 External valves

The discharge needle valve appears to be in good condition and corrosion-free.

It is noted that additional valves have been installed in recent years and it is recommended that the OM&S manuals are reviewed and updated if necessary to ensure that the operation of these valves, particularly in relation to dam safety is documented.

DSR 2015 -6 Review and update OM&S manuals to ensure all valves are included in operating procedures in relation to dam safety.

A summary of activity on operation and control equipment was not provided by NCC. A summary of operations of appurtenant mechanical devices should be provided for the IDSR.

DSR 2015 -7 Provide a summary of valve operation annually as part of the IDSR.

6.3 External piping

An external visual inspection of the piping and outlet valves indicates that they are in generally good condition (Photograph 6.11). However, the new paintwork on the upper pipe is stained and wearing thin (Photograph 6.12). Any required repair work should be done as required (as part of routine maintenance).

Photograph 6.11 - External piping downstream of culvert.

Photograph 6.12 - Stained and thinned paint on the upper pipe.

6.4 Control building and surrounds

The Control building and doors and adjacent walls are sound. The pipe work within the building appears to be in generally good order. Some minor areas of corrosion are evident at valves, pipe joints and brackets. Some of the valves are leaking, with water ponding below them. From discussions with the Caretaker we understand that the air valves are not functioning properly and may require replacement in the near future.

From discussions with the on-site Caretaker we understand that although key dam documentation is located on site, accessing relevant details by someone unfamiliar with the dam would be difficult in an emergency. It was recommended in 2013 that the current Emergency Action Plan (EAP) should be located in a prominent position in the control room. It was also recommended that the EAP be updated and tested for effectiveness so that areas of improvement can be identified.

Photograph 6.13 - Pipe work in the control building.

Photograph 6.14 - Water ponding beneath leaking valve.

Photograph 6.15 - Air valve not working properly.

The room for the piezometer gauges is relatively dry. Photograph 6.16 to Photograph 6.20 shows the piezometer gauges at the time of inspection. The humidity in the room is limited by a cover over the collection chamber for the dam's basal drainage system.

New automated flow meters consisting of a metal plate v notch weir and ultrasonic level detector have been installed on the LHS and RHS abutment drains (Photograph 6.21 and Error! Reference source not found.) in the seepage collection well. The flow meters resolve the health and safety issue arising from previously carrying out these readings manually (the central collector drain flows are not measured in the seepage collection well but are measured via the total outflow from the seepage well at the downstream of the outlet pipe).

DSR 2015 - 8 Review and update OM&S manuals to ensure all flow measurement procedures are up to date.

Photograph 6.16 – Hydraulic piezometer gauges P1 (left) to P6 (right).

Photograph 6.17 - Hydraulic piezometer gauges P7 (left) to P12 (right).

Photograph 6.18 - Hydraulic piezometer gauges P13 (left) to P18 (right).

Photograph 6.19 - Hydraulic piezometers P19 (left) to P21 (right).

Photograph 6.20 - Hydraulic piezometers P22 (left) to P27 (right).

Photograph 6.21 - Abutment drain RHS with new flow meter above central collector.

Photograph 6.22 - Abutment drain LHS with new flow meter

6.5 Mixing chamber

Steelwork evident in the mixing chamber appeared to be generally in good condition. However, due to the difficulties and safety issues in accessing the chamber it must be appreciated that features such as embedded concrete anchors could not be inspected.

Inspection of the mixing box valve room indicates that the valves and pipework appear to be in good working order. The access ladder handrail corrosion at the plate/bolt interface identified in the 2013 annual inspection still requires maintenance.

Photograph 6.23 - Mixing box valve room.

7 Reservoir shoreline

The reservoir's shoreline was inspected visually by boat and from the dam crest (Photograph 7.1). One minor area of erosion was identified along the left bank of the reservoir (Photograph 7.2). It was also noted that the bank at the inlet of the stream to the reservoir has eroded (Photograph 7.3), most likely from heavy rain in the weeks prior to the inspection. None of the erosion noted was considered significant enough to affect reservoir performance. No specific monitoring is proposed.

Photograph 7.1 - View of reservoir viewed from dam crest adjacent to spillway.

Photograph 7.2 - Erosion next to reservoir.

Photograph 7.3 - Bank where stream enters reservoir has eroded.

8 South Branch intake

The South Branch intake is inspected annually due to the importance in water reticulation for the resource consent conditions (although as noted in the 2014 annual report this is not considered a critical dam safety component and will not give rise to dam safety issues).

The South Branch Intake was in good condition with no evidence of significant damage, debris or obstruction (Photograph 8.1). However, a strong sulphur smell was evident on approach to the intake and at the intake itself caused by the backfeed water from the reservoir to the stream.

Photograph 8.1 - South branch intake weir.

9 Road access

The Maitai Dam access road is in good order and is being utilised by the public. The rip rap on the inside bend of the stream gauge appears to be stable and in good condition.

10 Summary

Table 10-1Error! Reference source not found. provides a summary of the current condition of the scheme components. The terms and meanings used to describe the current condition of the scheme features are presented in Table 10-2.

Table 10-1 Scheme Element Current Condition Summary

Scheme Element	Current condition	Comments
Embankment	Satisfactory	
Service Spillway	Satisfactory	
Auxiliary Spillway	Satisfactory	
Intake Tower	Satisfactory	
Culvert	Fair	Seepage through culvert joints.
Internal Pipework & Valves	Fair	Some corrosion and maintenance issues.
External Pipework	Satisfactory	
Control Building	Satisfactory	
Mixing Chamber	Satisfactory	

Overall the key structures of the Maitai Dam are in fair to satisfactory condition and are therefore expected to "fulfil their original functions", generally with maintenance recommended to improve performance.

It is noted that documentation may need to be revised to meet the expected requirements of a dam safety assurance programme (DSAP) required under the Dam Safety Scheme.

In addition there are numerous outstanding dam safety and asset management recommendations from previous Comprehensive Safety Reviews and Intermediate Safety Inspections. These are summarised in Section 11.

Table 10-2 Terms and meanings used to describe condition of scheme features

Term	Meaning
Satisfactory	The feature is expected to fulfil its intended function until the next inspection.
Fair	The feature is expected to fulfil its intended function under normal loading conditions until the next inspection, but maintenance is recommended. Infrequent hydrological and/or seismic events could result in a dam safety deficiency.
Poor	The feature may not fulfil its intended function; maintenance is necessary.
Unsatisfactory	The feature is not expected to fulfil its intended function; repair, replacement, or modification is necessary.

Notes: Bold text is used to identify the use of the above terms in the body of this report. Terms and definitions are adopted from USBR recommendations on inspection documentation[3].

[3]US Bureau of Reclamation, Safety Evaluation of Existing Dams Course Notes, Session 7, "Inspection Planning and Documentation", March 2012.

11 Recommendations

New recommendations and outstanding recommendations from previous Comprehensive Safety Reviews (CSR) and Annual Inspections (IDSR's) are summarised in the tables below. There has been some duplication of recommendations so we have removed older recommendations and referenced the newer recommendations where appropriate.

11.1 Comprehensive Safety Review recommendations

The latest Comprehensive Safety Review (CSR) was undertaken by Damwatch in 2013, recommendations remain outstanding from this and from the previous 2008 CSR.

The recommendations drawn from the 2008 CSR are set out in the table which follows, with priorities assigned to provide a recommended time frame as follows:

a within 12 months.

b prior to the next comprehensive safety review (2013 CSR).

Table 11-1 Outstanding Recommendations from 2008 CSR

No.	Recommendation	Priority	2008 CSR Report Reference	Action Status
CSR 2008 - 03	Level 2 triggers should be included within the field inspection sheets.	A	5.1	Draft surveillance plan (2011, T&T ref. 24480.401) to be formalised by NCC.
CSR 2008 - 04	A procedures document should be developed to outline the response procedure to a trigger. This procedure should include documenting each trigger and any actions required.	A	5.1	Draft surveillance plan (2011, T&T ref. 24480.401) to be formalised by NCC.
CSR 2008 - 05	Expand and update procedures to meet Dam Safety Regulations.	B	5.4	Draft surveillance plan (2011, T&T ref. 24480.401) to be formalised by NCC.

The recommendations drawn from 2013 CSR are set out in the table which follows, with priorities assigned 'A', 'B' or 'C', in order of priority. Priorities have been assigned by Damwatch.

Table 11-2 Outstanding Recommendations from 2013 CSR

No.	Recommendation	Priority	2013 CSR Report Reference	Action Status
CSR 2013 - 01	It is recommended the flood inundation maps include tables of flood travel times and depths.	B	2.3	
CSR 2013 - 02	It is recommended documentation of the PIC assessment based on the updated inundation mapping be prepared to fulfil requirements of the Dam Safety Scheme.	C	2.4	

No.	Recommendation	Priority	2013 CSR Report Reference	Action Status
CSR 2013 - 03	It is recommended the as-built drawing of the new pipework be included in the drawing record for Maitai Dam.	D	3.9	Supplemented with Recommendation DSR2015-6.
CSR 2013 - 04	It is recommended a site specific seismic risk study be performed for Maitai Dam.	B	4.2.3	
CSR 2013 - 05	It is recommended potential failure modes for Maitai Dam be developed.	B	5.0	
CSR 2013 - 06	It is recommended a characteristic model of Maitai Dam be developed for interpretation of surveillance information.	C	5.0	
CSR 2013 - 07	It is recommended the rusted pipework be cleaned and repainted.	C	6.1	
CSR 2013 - 08	It is recommend seepage emerging adjacent from the culvert be monitored with documentation on its development.	A	6.1	
CSR 2013 - 09	It is recommended the repairs are made to ensure a smooth finish on the chute floor of the service spillway.	C	6.1	Repairs made. More minor repairs marked out in 2015 IDSR.
CSR 2013 - 10	It is recommended the spillway chute walls be cleared of trees and bushes to facilitate inspection and prevent damage to the wall from root growth.	C	6.1	
CSR 2013 - 11	It is recommended that as-built location and installation details for B23 and B27 be confirmed and indicated on a drawing for the purpose of ongoing data evaluation.	B	7.3.2	
CSR 2013 - 12a	It is recommended that the purported water pressure in the upper embankment downstream of the chimney drain be thoroughly investigated and resolved. This should include an assessment of the reliability of the instruments and measured data, and consideration given to supplementary monitoring in this location.	A	7.3.2	
CSR 2013 - 12b	It is recommended all piezometer gauges should be calibrated to be accurate in their respective normal reading ranges.	B	7.3.2	
CSR 2013 - 13	It is recommended that piezometer de-airing operations continue at a frequency appropriate to observed accumulation of air in their data plots.	C	7.3.2	

No.	Recommendation	Priority	2013 CSR Report Reference	Action Status
CSR 2013 - 14	It is recommended that bottom of hole reduced levels be established for SB1-3 and BH7 to support ongoing data evaluation.	C	7.3.2	
CSR 2013 - 15	It is recommended the right exit area drain be checked for damage or blockage.	A	7.3.3	
CSR 2013 - 16	It is recommended that the spillway drainage system be assessed for condition and performance, and flushed to maintain functionality, as far as is practicable.	C	7.3.4	
CSR 2013 - 17a	It is recommended that Maitai Dam survey data be consolidated into a full and continuous historical record, managed in one repository, and that an appropriate suite of time-series and spatial plots be developed to allow evaluation.	C	7.4	
CSR 2013 - 17b	It is recommended that the dam survey mark locations and movement vectors be plotted onto the as-built valley cross sections so that deformations can be evaluated in the context of foundation geometry.	C	7.4	
CSR 2013 - 18	It is also recommended that inspection, monitoring and evaluation requirements be reviewed and updated with consideration of the dam's potential failure modes.	B	7.5	
CSR 2013 - 19	It is recommended that monthly routine surveillance data is evaluated at the same monthly frequency by a dam safety engineer.	B	7.5	
CSR 2013 - 20	It is recommended that NCC dam surveillance data management arrangements be reviewed by an appropriate advisor and improvements made to ensure quality assurance and security of data. Data presentation methods should also be reviewed and improvements implemented to ensure that surveillance evaluation is continuous and effective.	B	7.5	
CSR 2013 - 21	It is recommended inspection of the upstream slope area of the auxiliary spillway be performed following unusual high reservoir levels.	C	8.2.2	
CSR 2013 - 22	It is recommended that a full slope stability analysis be performed for Maitai Dam following verification of piezometric conditions within the embankment.	B	8.3.1	

No.	Recommendation	Priority	2013 CSR Report Reference	Action Status
CSR 2013 - 23	It is recommended assessment of seismic-induced deformations (settlement and cracking) be performed as part of the slope stability analysis of Maitai Dam following development of ground motions from the site specific seismic risk study.	B	8.3.1	
CSR 2013 - 24	It is recommended the potential for internal erosion as a result of seismic induced cracking be assessed at Maitai Dam.	B	8.3.1	
CSR 2013 - 25	It is recommended an assessment of potential internal erosion be performed for Maitai Dam embankment materials using current methods of practice.	B	8.3.2	
CSR 2013 - 26	It is recommended the risks associated with internal erosion and potential overtopping of the crest be assessed for Maitai Dam.	B	8.3.2	
CSR 2013 - 27	It is recommended that the performance characteristics of the Maitai Dam scour offtake are understood for the purpose of emergency dam dewatering.	B	8.5	
CSR 2013 - 28	It is recommended that procedures for ongoing surveillance activities be formalised, including a process to ensure evaluation, quality assurance and follow up of routine monthly surveillance data collected.	B	9.3.3	
CSR 2013 - 29	It is recommended that procedures for the investigation, assessment and resolution of dam safety deficiencies be formalised.	B	9.3.3	Covered by draft Surveillance Plan dated November 2010 (T&T ref 24480.401). NCC to formalise.
CSR 2013 - 30	It is recommended that Maitai Dam appurtenant structures and gates and valves that contribute to reservoir safety be formally identified and testing arrangements made.	B	9.3.3	Covered by draft Surveillance Plan dated November 2010 (T&T ref 24480.401). NCC to formalise. Refer also recommendation DSR2015-6.
CSR 2013 - 31	It is recommended that the Maitai Dam Emergency Action Plan is completed, that NCC staff and emergency agencies become highly familiar with it, and that it is tested for effectiveness and areas identified for improvement addressed.	A	9.3.3	Draft EAP dated November 2010 (T&T ref 24480.401) requires update and to include latest inundation maps, distribution and issue to relevant parties.

11.2 Summary of current IDSR recommendations

Recommendations from the foregoing sections are summarised below with the priorities identified as follows, and some comment on relevant actions since the last annual inspection report. The table includes unresolved/ongoing previous recommendations as well as recommendations arising from the current inspection. The remaining recommendations in this table are in addition to the CSR recommendations listed in Section 11.1 above.

Priority Rankings:

P = Priority. Should be attended to immediately.
N = Needed. Needs to be done as soon as practicable.
D = Desirable. Should be attended to before the next annual inspection.

Table 11-3 ISI Dam Safety Recommendations

No.	Recommendation	Refer Section	Ranking	Status/ Action
(a)	Dam and Instrumentation			
DSR 2010 - 6	Continue to monitor drain outflows from CC, LMC and RMC after heavy rain to check maximum acceptable flow not exceeded.	2.5	N	Trigger level of 75 mm within 24 hrs adopted by NCC. OM&S to be updated.
DSR 2013 - 10	Investigate options for installation of stainless v-notch weir and water level sensors for automatic monitoring of well drain flows to minimise health and safety issues arising from current manual reading.	6.4	D	Completed.
DSR 2014 - 1	Review and update the instrument trigger levels as part of the OM&S documentation upgrade.	2	N	
DSR 2015 - 1	Classify Maitai Dam (and other Classifiable dams owned by NCC) and lodge classification(s) with regional authority within 3 months of the Building (Dam Safety) Regulations coming in to force.	1.5.2.2	P/N	To be completed within 3 months of the implementation of the dam safety scheme
DSR 2015 - 2	Prepare a dam safety assurance programme for audit by a recognised engineer, to be submitted to the regional authority within 1 year of lodging classification for Maitai Dam.	1.5.2.2	P/N	To be completed within 12 months of the implementation of the dam safety scheme
DSR 2015 - 3	Review P5 de-airing requirements and criticality.	2.3	N	
DSR 2015 - 4	Collect and provide daily rainfall data	2.5	N	
DSR 2015 - 8	Review and update OM&S manuals to ensure all flow measurement procedures are up to date.	6.4	N	Update O&M Manual to reflect.

No.	Recommendation	Refer Section	Ranking	Status/ Action
(b)	Spillways			
DSR 2010 - 8	Repair crack and loose piece of concrete on left abutment wall, at contact with slab joint mid-way up the service spillway.	4.1.1	P	Completed
DSR 2013 - 2	Repair/replace reservoir level gauge on service spillway crest.	4.1	N	
(c)	Intake Tower			
DSR 2010 - 11	Continue annual diver inspections and replacement of significantly corroded nuts and bolts.	5.2	N	Update O&M Manual to reflect.
DSR 2010 - 12	Continue regular (annual) monitoring of effect of relocated cathodic protection during diver inspections.	5	N	Update O&M Manual to reflect.
(d)	Culvert & Pipework			
DSR 2013 - 8	Investigate deterioration and source of fines at Culvert Section 8/9 joint and repair joint sealant at Culvert Section 6, 7 and 8 as required.	6.1	N	
DSR 2013 - 9	Direct seepage on true left wall of conduit away from pipe bracket and cable tray at Culvert Section 6. Clean and check bracket and fixings for corrosion damage.	6.1	N	
(e)	South Branch Intake			
(f)	Mechanical and electrical			
DSR 2015 - 5	Review drawdown procedures involving screen removal, including in an emergency and update OM&S manual as needed.	5.1	N	Update O&M Manual to reflect.
DSR 2015 - 6	Review and update OM&S manuals to ensure all valves are included in operating procedures in relation to dam safety.	6.2	N	Update O&M Manual to reflect.
DSR 2015 - 7	Provide a summary of valve operation annually as part of the IDSR.	6.2	D	Ongoing Recording
(g)	Access roads			

In addition to the dam safety recommendations above, asset management recommendations are made in the following table.

Table 11-4 IDSR Asset Management Recommendations

No.	Recommendation	Refer Section	Ranking	Status/ Action
(a)	Dam and Instrumentation			

No.	Recommendation	Refer Section	Ranking	Status/ Action
(b)	Spillways			
AMR 2104 - 1	Investigate and upgrade spillway barrier as required to ensure compliance with Building Code/Building Act.	4.3	P	
(c)	Intake Tower			
AMR 2011 - 3	Replace failed intake tower screen winch with a new winch. Ensure new system is fit for purpose and has adequate safety features to minimise risk of damage to pipes and diver/operator injury.	5.1	N	Alex Miller (NCC) advises in his 2 September 2013 email that "*the failed winch is solely for the purpose of lifting the scour plate and as this is invariably programmed work, a winch can be hired on each occasion for the short period of time (days) involved. We will check the attachment point for corrosion"*
AMR 2013 - 7	Repair corroded winch components on intake tower superstructure.	5.1	N	
(d)	Culvert & Pipework			
(e)	South Branch Intake			
AMR 2010 - 4	Include modifications in update of As Built drawings.	8	D	
AMR 2011 - 4	Include inspection of undermined South Branch concrete apron in annual inspections and repair as required.	8.1	N	
(f)	Mechanical and electrical			
(g)	Access roads			

12 Applicability

This report has been prepared for the benefit of Nelson City Council with respect to the particular brief given to us and it may not be relied upon in other contexts or for any other purpose without our prior review and agreement.

Tonkin & Taylor Ltd

Environmental and Engineering Consultants

Report prepared by:	Authorised for Tonkin & Taylor Ltd by:
.....	.....
Alex Evans	David Bouma
Natural Resources Engineer	Business Leader – Dams (NZ)
	Recognised Engineer, Category A

Report reviewed by:

.....

Neville Laverack (Senior Water Resources Engineer)

Paul McCallum (Recognised Engineer, Category A)

AAJE
\\ttgroup.local\corporate\auckland\projects\24480\24480.9000\issueddocuments\20150311.aaje.maitai dam 2015 annual report.docx

Appendix A: Relevant Drawings

- Drawing 12446 Fig 1 – Seepage Measurement and Standpipe Locations
- Fig 2 – Diagrammatic Illustration of Pipework and Control System
- Drawing 6516-10 AB – Dam Internal Drainage Plan & Details
- Drawing 6516-12 AB – Instrumentation Layout and Details
- Drawing 6516-101 AB – Culvert General Arrangement

LEGEND: Monitoring Locations

1. Rainfall Guage
2. Water Level Recorder
3. Seepage Collector Outlet
4. Exit Area Outlets
5. Abutment Drain Outlets
6. Standpipes
7. Interceptor Drain in Culvert Invert
9. Spillway Drains
10. Chimney Drain H.L.Outlet
11. Mixing Box Drains
12. Control Building – MH
13. Exit Area
14. Handbore Standpipes
15. "Information Point" Seepage

NOTE:
To be updated pre 1996 report including general observation points and renumbering.

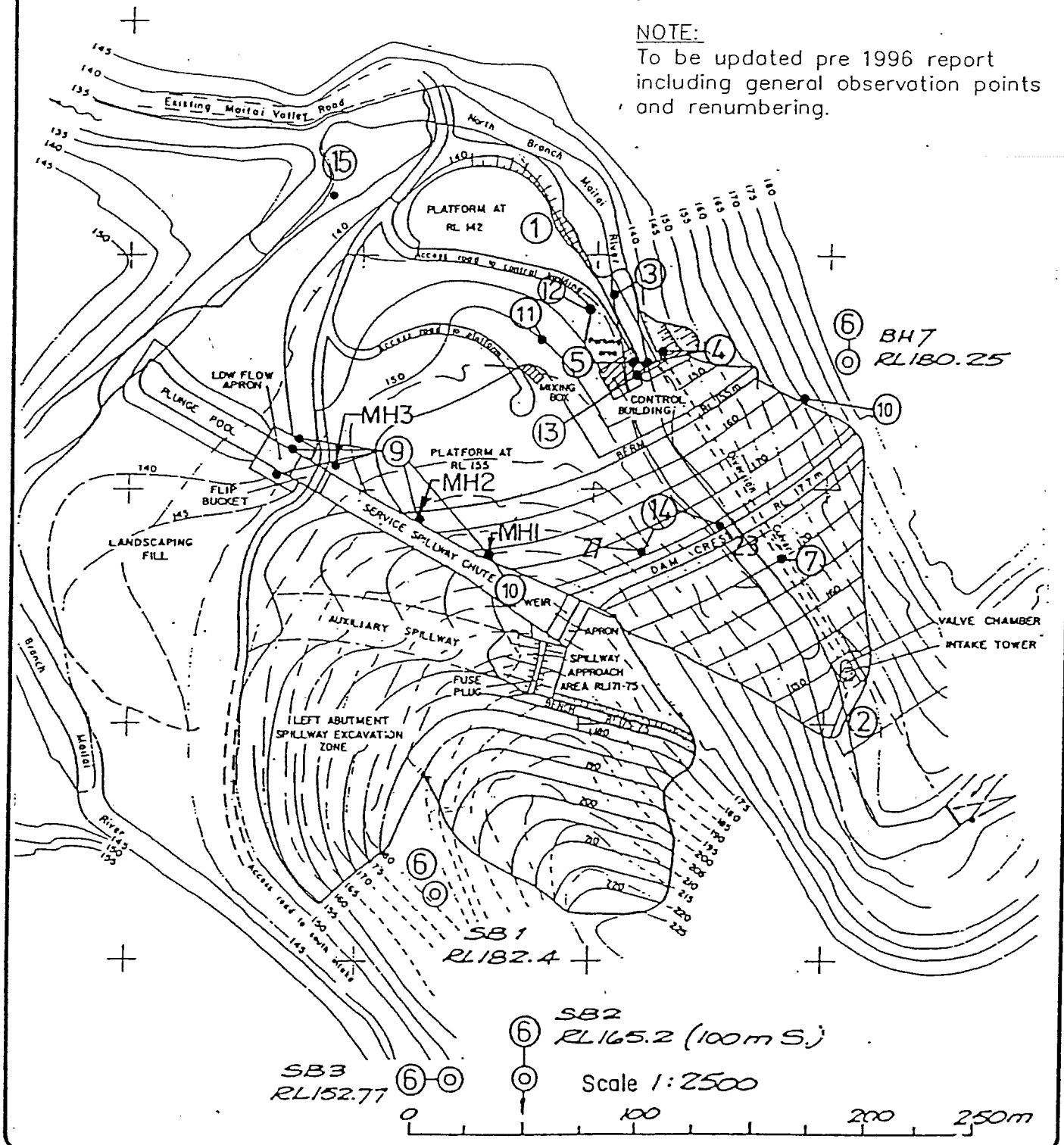

MAITAI WATER SUPPLY PROJECT

NORTH BRANCH DAM

Seepage Measurement and Standpipe Locations

TONKIN & TAYLOR
CONSULTING ENGINEERS

Drawing No.	Rev.
12446 Fig. 1	1
Date Oct. 1995	
Drawn M.L.J.	Checked

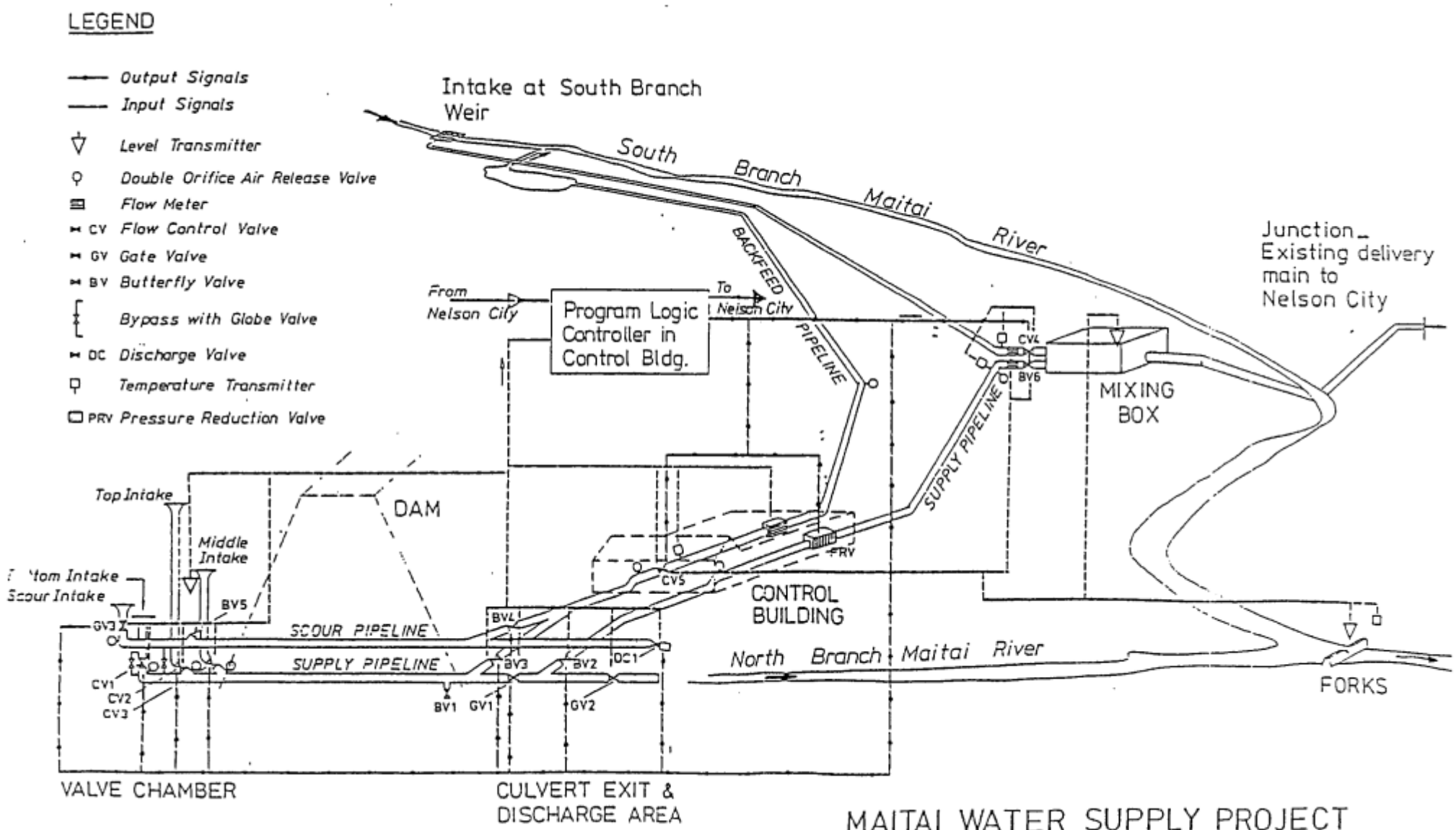

MAITAI WATER SUPPLY PROJECT

Diagrammatic Illustration of Pipework and Control System **FIG 2**

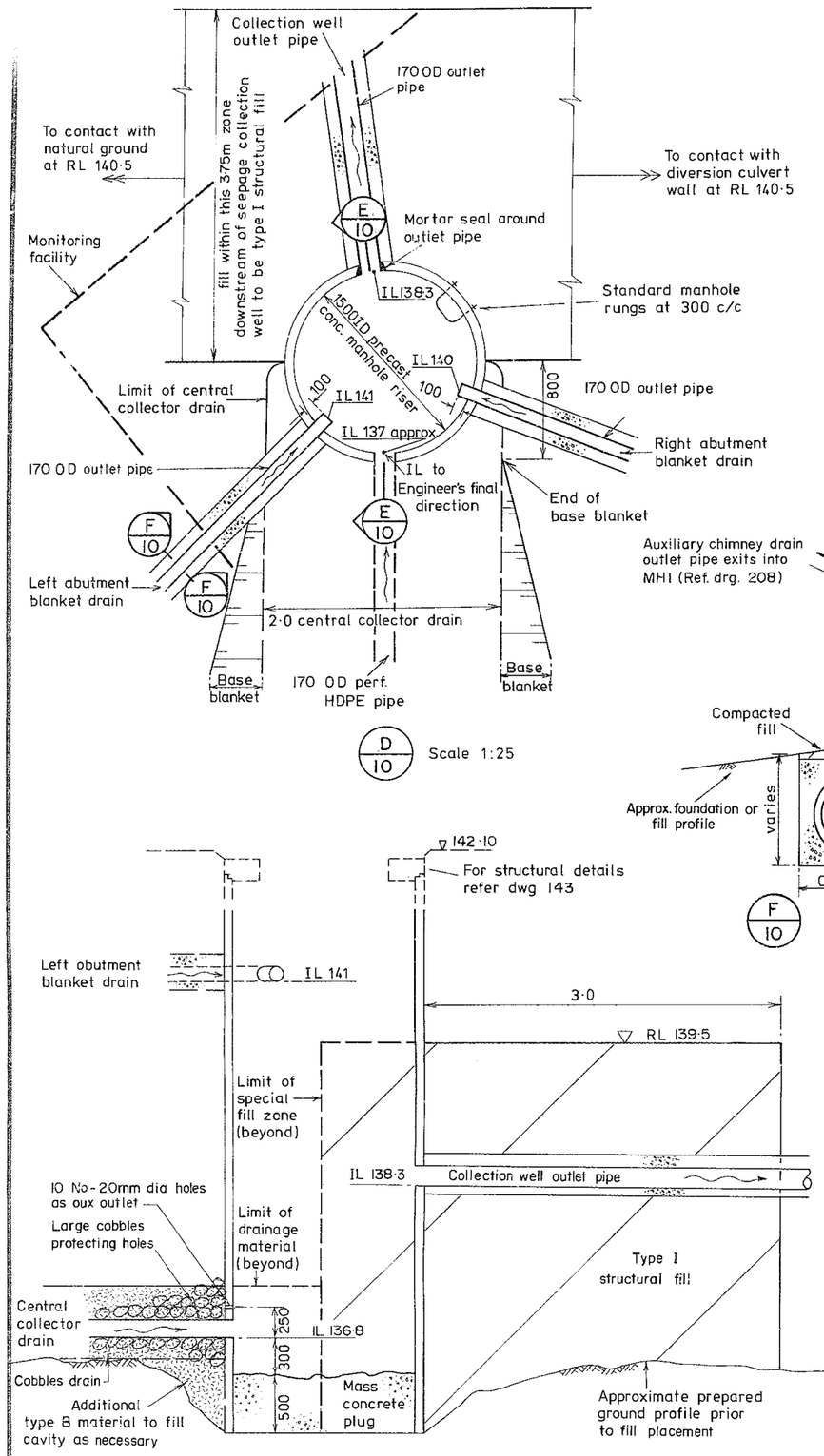

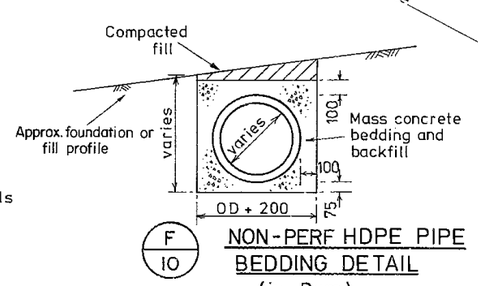

NON-PERF HDPE PIPE BEDDING DETAIL (in Dam)

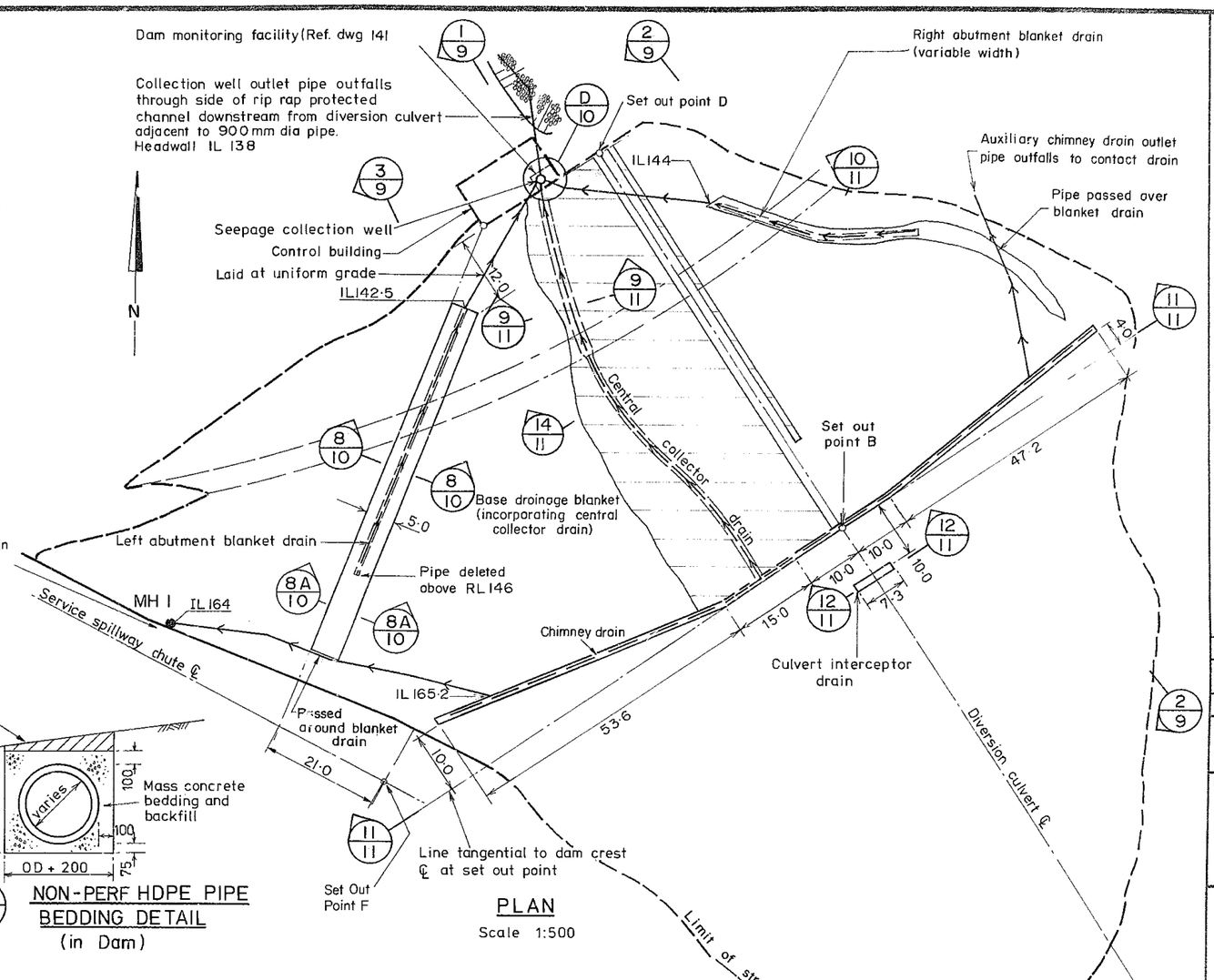

PLAN
Scale 1:500

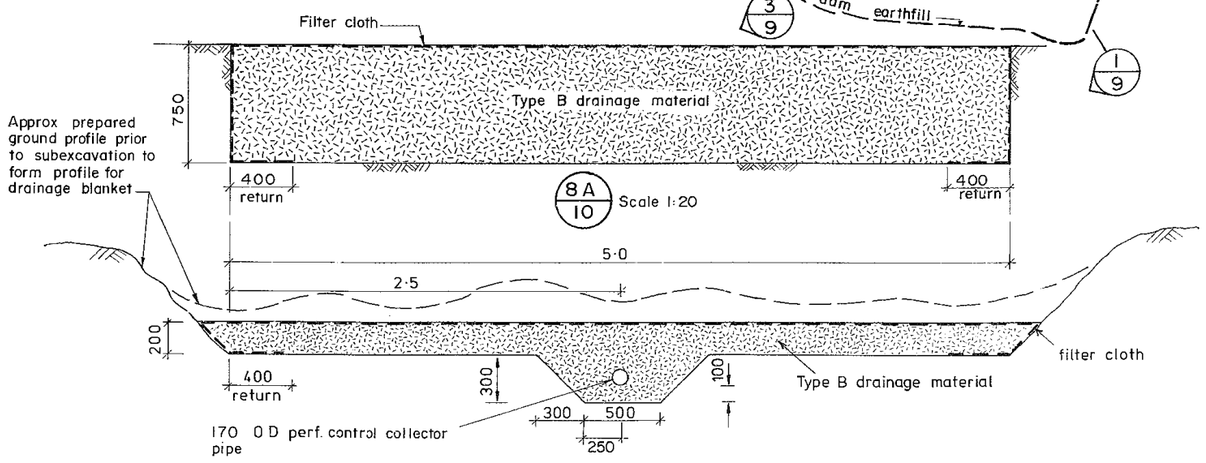

LEGEND
- Perforated high density polyethylene pipe
- Non-perforated high density polyethylene pipe

NOTES

0	First Issue		
REVISION		CHECKED	
		Initial	Date
Drawing Checked			
APPROVED			

This drawing is not to be used for construction purposes unless signed as approved

REFERENCE

TONKIN & TAYLOR LTD
CONSULTING ENGINEERS
REGISTERED SURVEYORS
WELLINGTON
IN ASSOCIATION WITH
WORSELDINE & WELLS
CONSULTING CIVIL & STRUCTURAL ENGINEERS
NELSON

TITLE
NELSON CITY COUNCIL
MAITAI WATER SUPPLY PROJECT
NORTH BRANCH DAM
Dam Internal Drainage Plan & Details
AS BUILT

ORIGINAL SCALES
1:500 1:25 1:20

DRAWING No 6516-10 AB
DATE Sept 1987
Revision 0

Graphic Scale:

PIEZOMETER LOCATIONS

LINE 1			LINE 2			LINE 3		
Code	RL	Dist from ℄ Crest	Code	RL	Dist from ℄ Crest	Code	RL	Dist from ℄ Crest
P 1	135·28	77·5 u/s	P 10	156·5	28·0 u/s	P 16	155·6	27·0 u/s
P 2	129·8	35·5 u/s	P 11	158·0	18·5 u/s **	P 17	155·6	13·5 u/s **
P 3	143·0	26·0 u/s	P 12	149·3	10·5 d/s	P 18	150·9	4·5 d/s
P 4	143·0	6·5 d/s	P 13	156·3	28·5 d/s	P 19	156·3	26·5 d/s
P 5	137·0	21·0 d/s *	P 14	153·5	50·5 d/s	P 20	149·4	57·3 d/s
P 6	142·1	52·0 d/s	P 15	148·4	60·5 d/s	P 21	146·45	70·3 d/s
P 7	135·7	90·0 d/s	P 24	169·25	10·5 u/s	P 26	169·3	7·5 u/s
P 8	156·9	36·5 u/s	P 25	169·35	8·0 d/s	P 27	169·35	8·5 d/s
P 9	156·5	20·0 d/s						
P 22	169·25	11·0 u/s						
P 23	169·4	7·0 d/s						

MARKER LOCATIONS

LINE 1			LINE 2			LINE 3		
Code	RL	Dist from ℄ Crest	Code	RL	Dist from ℄ Crest	Code	RL	Djst from ℄ Crest
S 1	Surface	73·2 u/s	S 5	Surface	34·2 u/s	S 8	Surface	34·2 u/s
S 2	Surface	34·2 u/s	S 6	Surface	3·0 d/s	S 9	Surface	3·0 d/s
S 3	Surface	3·0 d/s	S 7	Surface	53·2 d/s	S 10	Surface	53·2 d/s
S 4	Surface	53·2 d/s						

(* Offset refer section)
(** May be offset towards culvert-to remain in Type I fill - position to Engineers direction)

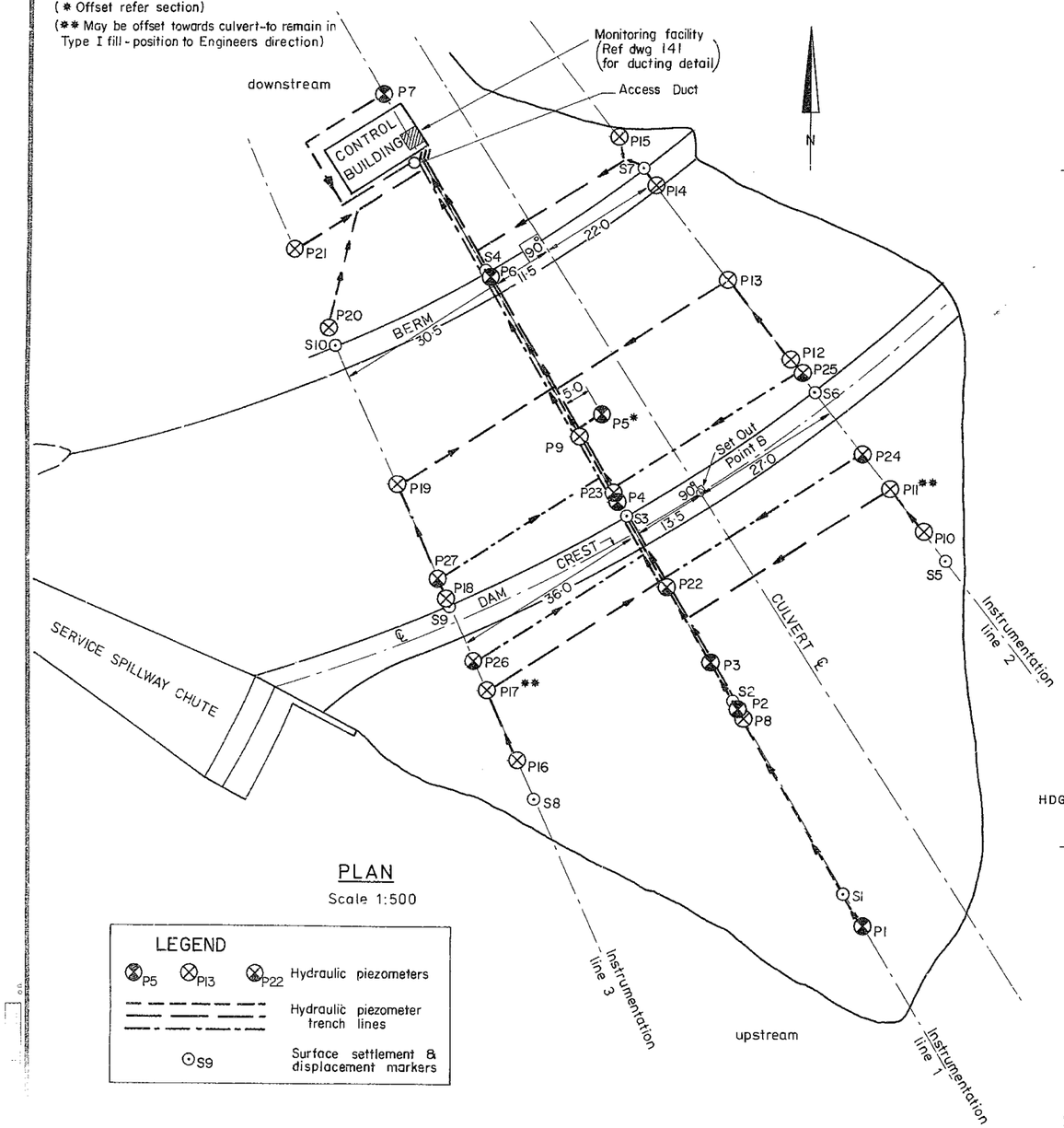

PLAN

Scale 1:500

LEGEND

- P5 P13 P22 — Hydraulic piezometers
- Hydraulic piezometer trench lines
- S9 — Surface settlement & displacement markers

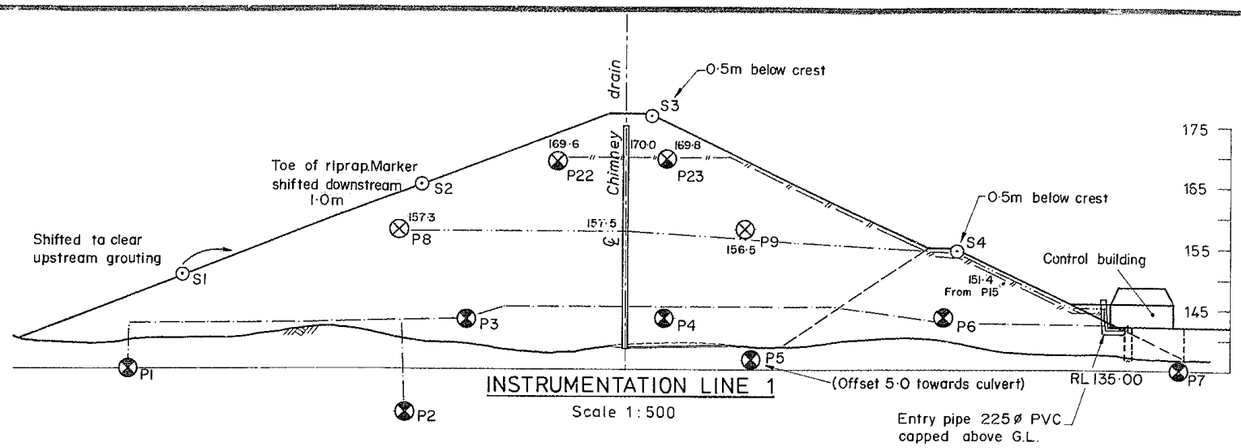

INSTRUMENTATION LINE 1

Scale 1:500

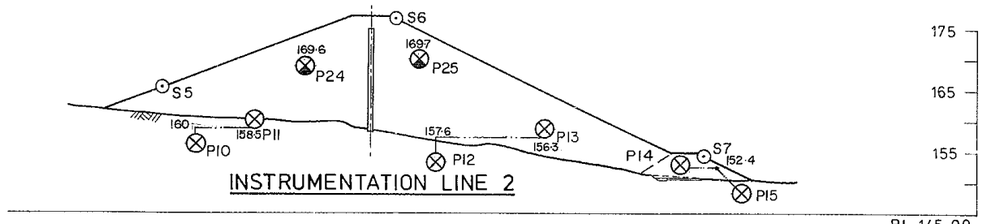

INSTRUMENTATION LINE 2

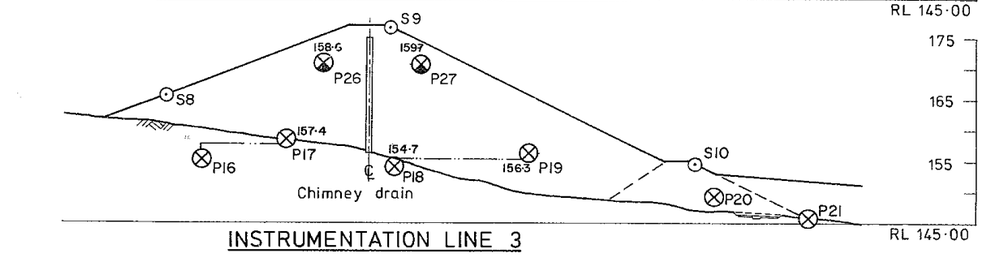

INSTRUMENTATION LINE 3

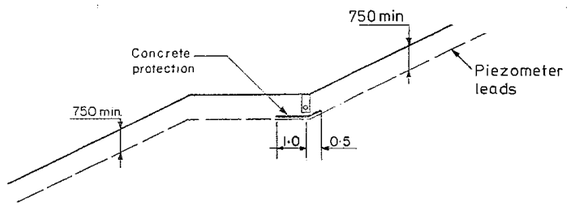

PIEZOMETER LEAD TRENCH DETAIL AT BERM

1:100

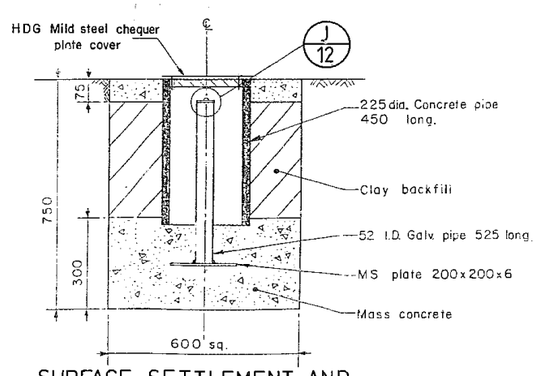

SURFACE SETTLEMENT AND DISPLACEMENT MARKERS 1:10

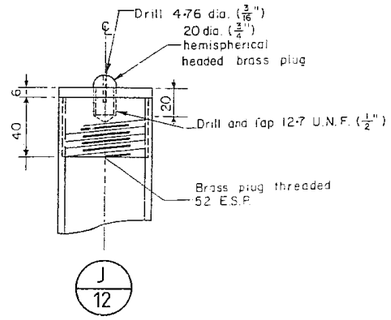

1:2

NOTES

1. The contractor has avoided routing the instrument lead trenching though granular drainage layers where possible
2. Where the instrument leads pass through the chimney drain they are encased in HDPE pipe 1·0m long
3. The level of the fill at the time of piezometer installation was at or just above the level indicated by the piezometer symbols :-
   - RL 145
   - RL 158
   - RL 170
4. Piezometer tip levels shown on cross sections indicative only
5. Levels on section are trench invert profiles.
   - Trench Profiles

0	First Issue		
REVISION		CHECKED Initial	Date
Drawing Checked			

APPROVED

This drawing is not to be used for construction purposes unless signed as approved

REFERENCE

TONKIN & TAYLOR LTD
CONSULTING ENGINEERS
REGISTERED SURVEYORS
WELLINGTON
IN ASSOCIATION WITH
WORSELDINE & WELLS
CONSULTING CIVIL & STRUCTURAL ENGINEERS
NELSON

TITLE

NELSON CITY COUNCIL

MAITAI WATER SUPPLY PROJECT

NORTH BRANCH DAM

Instrumentation Layout and Details

AS BUILT

ORIGINAL SCALES 1:500 1:100 1:10 1:2

DRAWING No 6516-12 AB

DATE Sept 1987

Revision 0

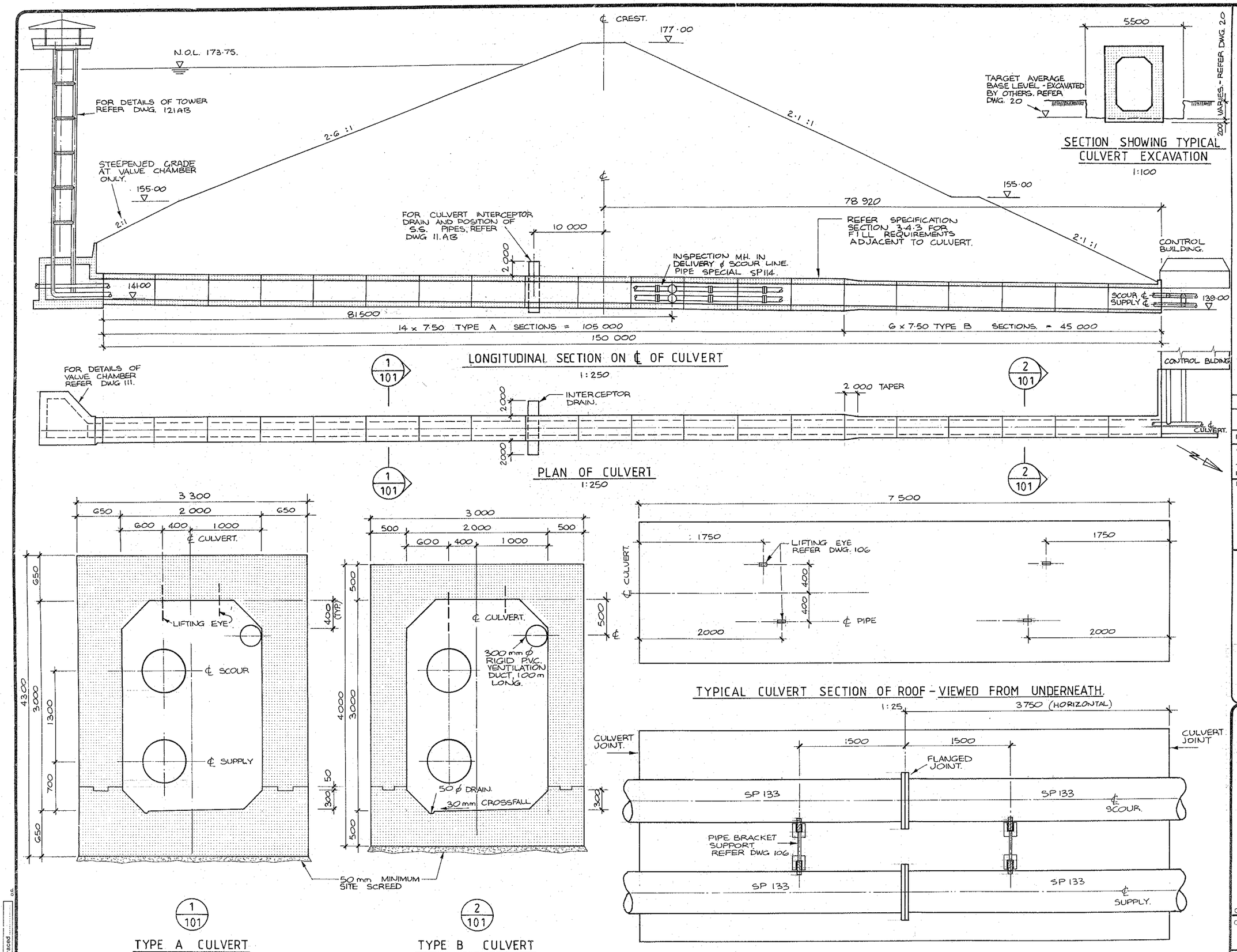

NOTES

REVISION	CHECKED Initial	Date
First Issue		

Drawing Checked

APPROVED

This drawing is not to be used for construction purposes unless signed as approved.

REFERENCE

TONKIN & TAYLOR LTD

CONSULTING ENGINEERS
REGISTERED SURVEYORS
WELLINGTON

IN ASSOCIATION WITH
WORSELDINE & WELLS
CONSULTING CIVIL & STRUCTURAL ENGINEERS
NELSON

TITLE

NELSON CITY COUNCIL

MAITAI WATER SUPPLY PROJECT

NORTH BRANCH DAM

Culvert
General Arrangement

AS BUILT

ORIGINAL SCALES
1:25, 1:100, 1:250.

DRAWING No. 6516-101 AB

DATE Oct 1987

Revision

Drawn/Traced

Graphic Scale:

Appendix B: Piezometer, standpipe and seepage records

- Summary of records, Plots 1 to 5

LOCATION	Max. Acceptable Flow (l/sec)	Range of Recorded Flows (l/sec)	
		1986 – March 2015	Operation Period April 2014 – March 2015
Main Dam Central Collector (CC) *	14.0	0.38 – 7.86	0.38 – 2.42
Seepage Collector Outlet	14.0	0.38 – 9.58	0.38 – 2.42
Exit Area Outlet			
- RHS	5.0	Nil – 3.64	Nil – 0.5
- LHS	0.5	Nil	Nil
Abutment Drain Outlet			
- LHC	2.0	Nil – 0.59	Nil – 0.13
- RHC	2.0	Nil – 3.20	Nil – 0.14
Interceptor Drain in Culvert Invert	0.1	Nil – 0.08	Nil – 0.05
Spillway Drainage:			
- Apron LHS	1.0#	Nil – 0.52	Very slow trickle – Mod flow
- Apron RHS	1.0#	Nil – 0.50	Very slow trickle – Mod flow
- Apron RHS (no fines)	0.5	Nil – Fast flow	Nil – Mod flow
- MH3 from slab 6	0.5	Nil – 0.56	Nil
- MH3 from slab 5	0.5	Nil – 0.20	Nil
- MH3 from RHS walls (cut off)	0.5	Nil	Nil
- MH3 from RHS walls (local)	0.5	Nil – 0.15	Nil
- MH3 Main Collector	4.0+	Nil	Nil
- MH2 from slab 4	0.5	Nil	Nil
- MH2 from slab 3	0.5	Nil	Nil
- MH2 from LHS walls	0.5	Nil	Nil
- MH2 from RHS walls	0.5	Nil	Nil
- MH2 main collector	2.0+	Nil – 0.14	Nil
- MH1 from slab 2	0.5	Nil	Nil
- MH1 from slab 1 (lower)	0.5	Nil – 0.13	Nil
- MH1 from slab 1 (upper)	0.5	Nil	Nil
- MH1 from LHS walls	0.5	Nil – 0.05	Nil
- MH1 from RHS walls	0.5	Nil	Nil
Chimney Drain High Level			
- in Spillway MH1	Measurable Flow	Nil	Nil
- in RHS c drain	Measurable Flow	Nil	Nil
Drainage from Mixing Box	Measurable Flow	Nil	Nil – Slow flow
Control Building			
- Exit Area	Measurable Flow	Nil – 0.11	Nil
- Manhole Area	Measurable Flow	Nil – 0.10	Nil

Notes:

* Flows are calculated by subtracting LHC& RHC Abutment flows from the seepage collector outlet.

** Indicates peak flow is from specific monitoring following heavy rainfall

\# Drainage from flip bucket may increase this flow by up to 15 l/sec

Reservoir Level in Operational Period: approx. 173.50 – 173.88 m RL

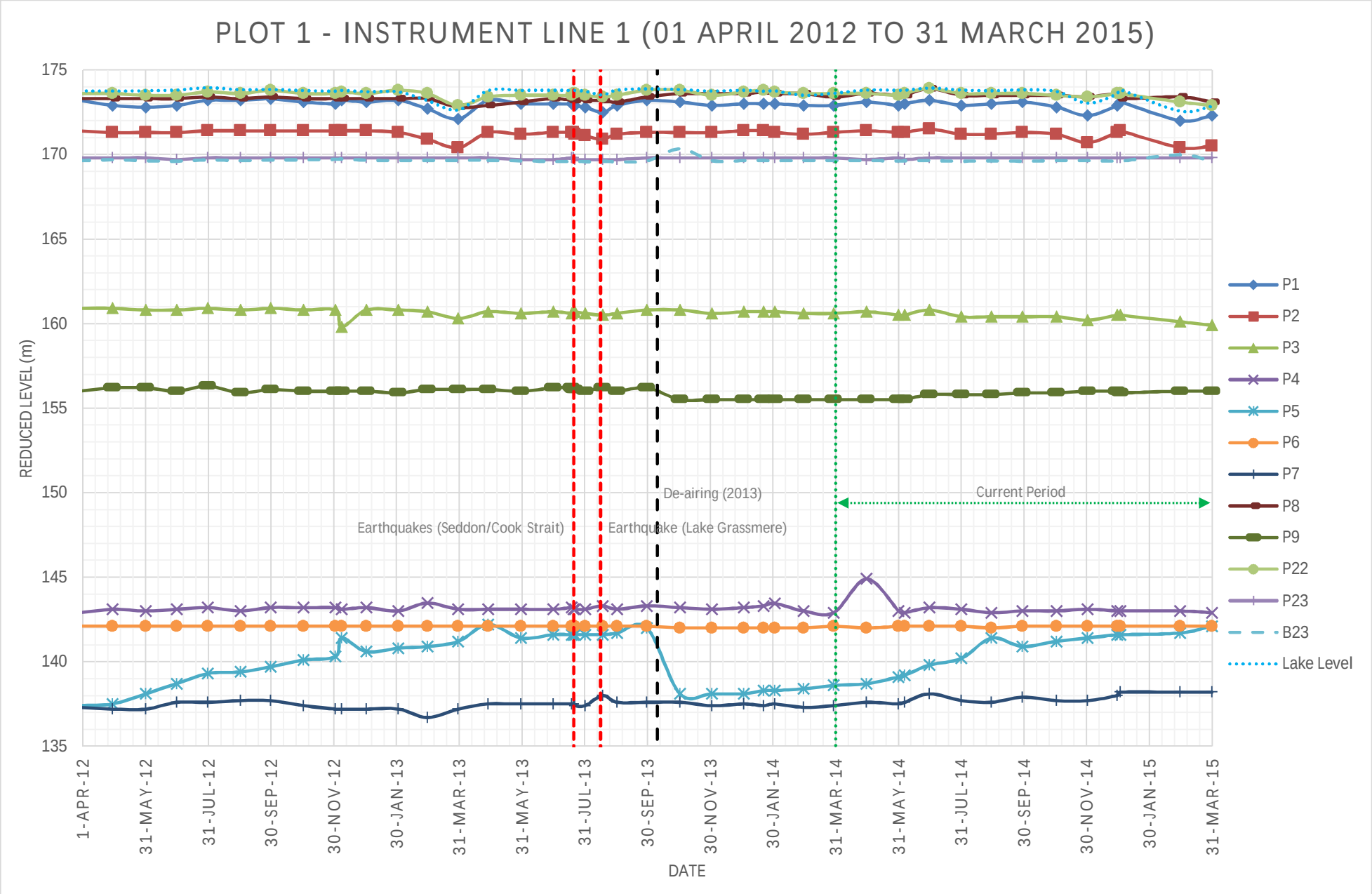
PLOT 1 - INSTRUMENT LINE 1 (01 APRIL 2012 TO 31 MARCH 2015)
REDUCED LEVEL (m)
175
170
165
160
155
150
145
140
135
1-APR-12
31-MAY-12
31-JUL-12
30-SEP-12
30-NOV-12
30-JAN-13
31-MAR-13
31-MAY-13
31-JUL-13
30-SEP-13
30-NOV-13
30-JAN-14
31-MAR-14
31-MAY-14
31-JUL-14
30-SEP-14
30-NOV-14
30-JAN-15
31-MAR-15
DATE
Earthquakes (Seddon/Cook Strait)
Earthquake (Lake Grassmere)
De-airing (2013)
Current Period
P1
P2
P3
P4
P5
P6
P7
P8
P9
P22
P23
B23
Lake Level

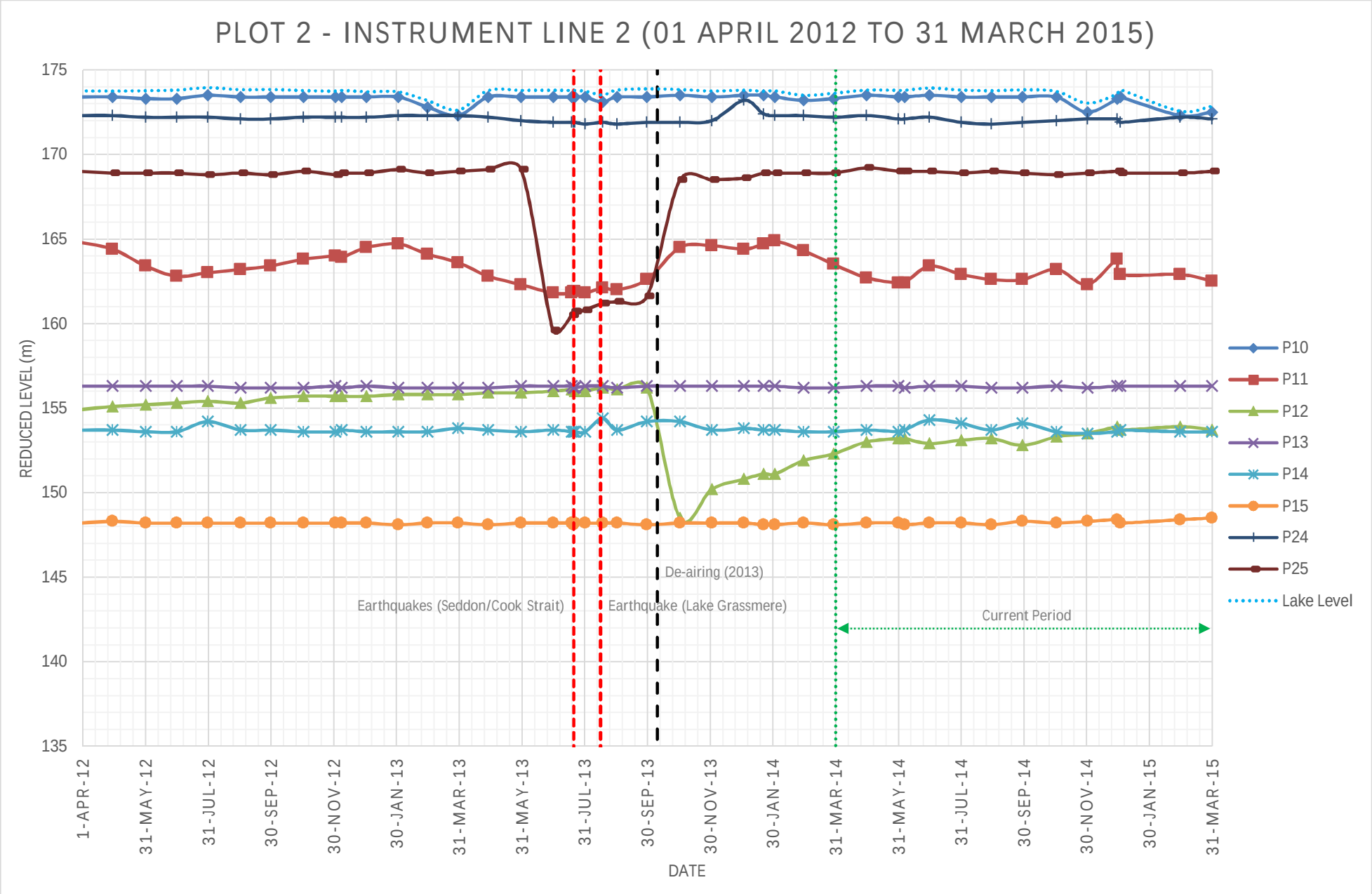
PLOT 2 - INSTRUMENT LINE 2 (01 APRIL 2012 TO 31 MARCH 2015)
REDUCED LEVEL (m)
175
170
165
160
155
150
145
140
135
1-APR-12
31-MAY-12
31-JUL-12
30-SEP-12
30-NOV-12
30-JAN-13
31-MAR-13
31-MAY-13
31-JUL-13
30-SEP-13
30-NOV-13
30-JAN-14
31-MAR-14
31-MAY-14
31-JUL-14
30-SEP-14
30-NOV-14
30-JAN-15
31-MAR-15
DATE
Earthquakes (Seddon/Cook Strait)
Earthquake (Lake Grassmere)
De-airing (2013)
Current Period
P10
P11
P12
P13
P14
P15
P24
P25
Lake Level

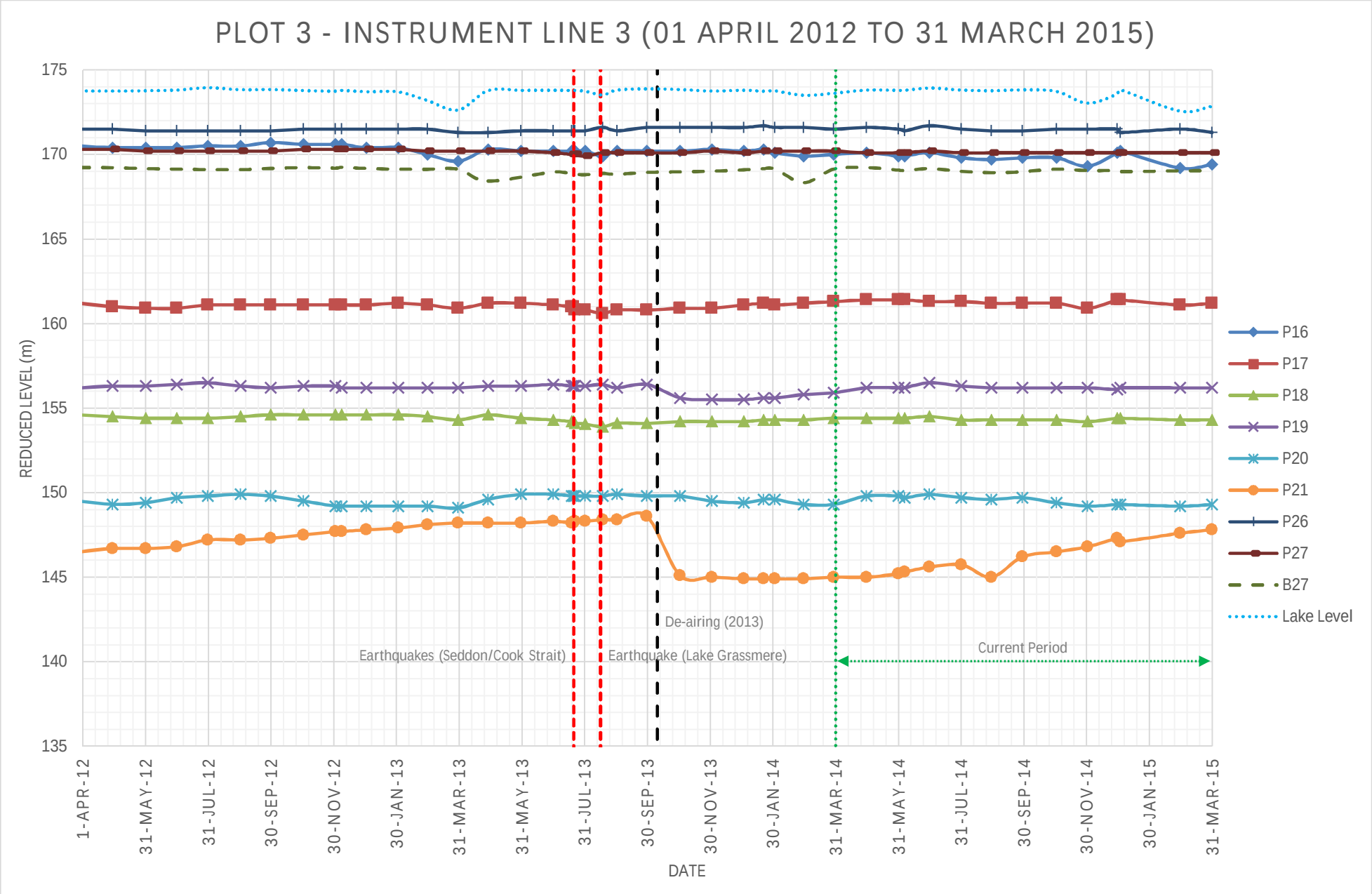
PLOT 3 - INSTRUMENT LINE 3 (01 APRIL 2012 TO 31 MARCH 2015)
REDUCED LEVEL (m)
175
170
165
160
155
150
145
140
135
1-APR-12
31-MAY-12
31-JUL-12
30-SEP-12
30-NOV-12
30-JAN-13
31-MAR-13
31-MAY-13
31-JUL-13
30-SEP-13
30-NOV-13
30-JAN-14
31-MAR-14
31-MAY-14
31-JUL-14
30-SEP-14
30-NOV-14
30-JAN-15
31-MAR-15
DATE
Earthquakes (Seddon/Cook Strait)
Earthquake (Lake Grassmere)
De-airing (2013)
Current Period
P16
P17
P18
P19
P20
P21
P26
P27
B27
Lake Level

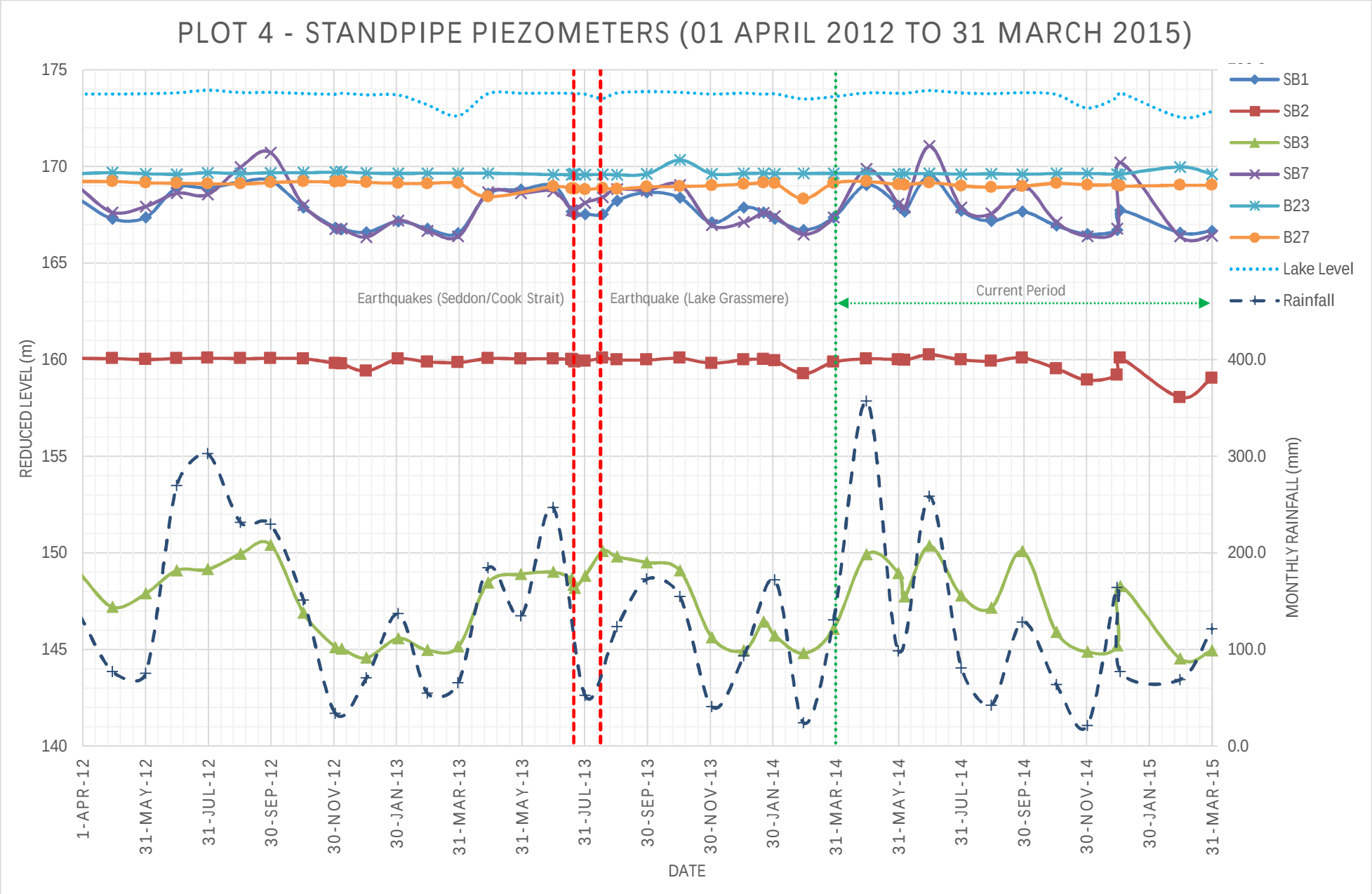
PLOT 4 - STANDPIPE PIEZOMETERS (01 APRIL 2012 TO 31 MARCH 2015)
REDUCED LEVEL (m)
MONTHLY RAINFALL (mm)
DATE
Earthquakes (Seddon/Cook Strait)
Earthquake (Lake Grassmere)
Current Period
SB1
SB2
SB3
SB7
B23
B27
Lake Level
Rainfall
175
170
165
160
155
150
145
140
400.0
300.0
200.0
100.0
0.0
1-APR-12
31-MAY-12
31-JUL-12
30-SEP-12
30-NOV-12
30-JAN-13
31-MAR-13
31-MAY-13
31-JUL-13
30-SEP-13
30-NOV-13
30-JAN-14
31-MAR-14
31-MAY-14
31-JUL-14
30-SEP-14
30-NOV-14
30-JAN-15
31-MAR-15

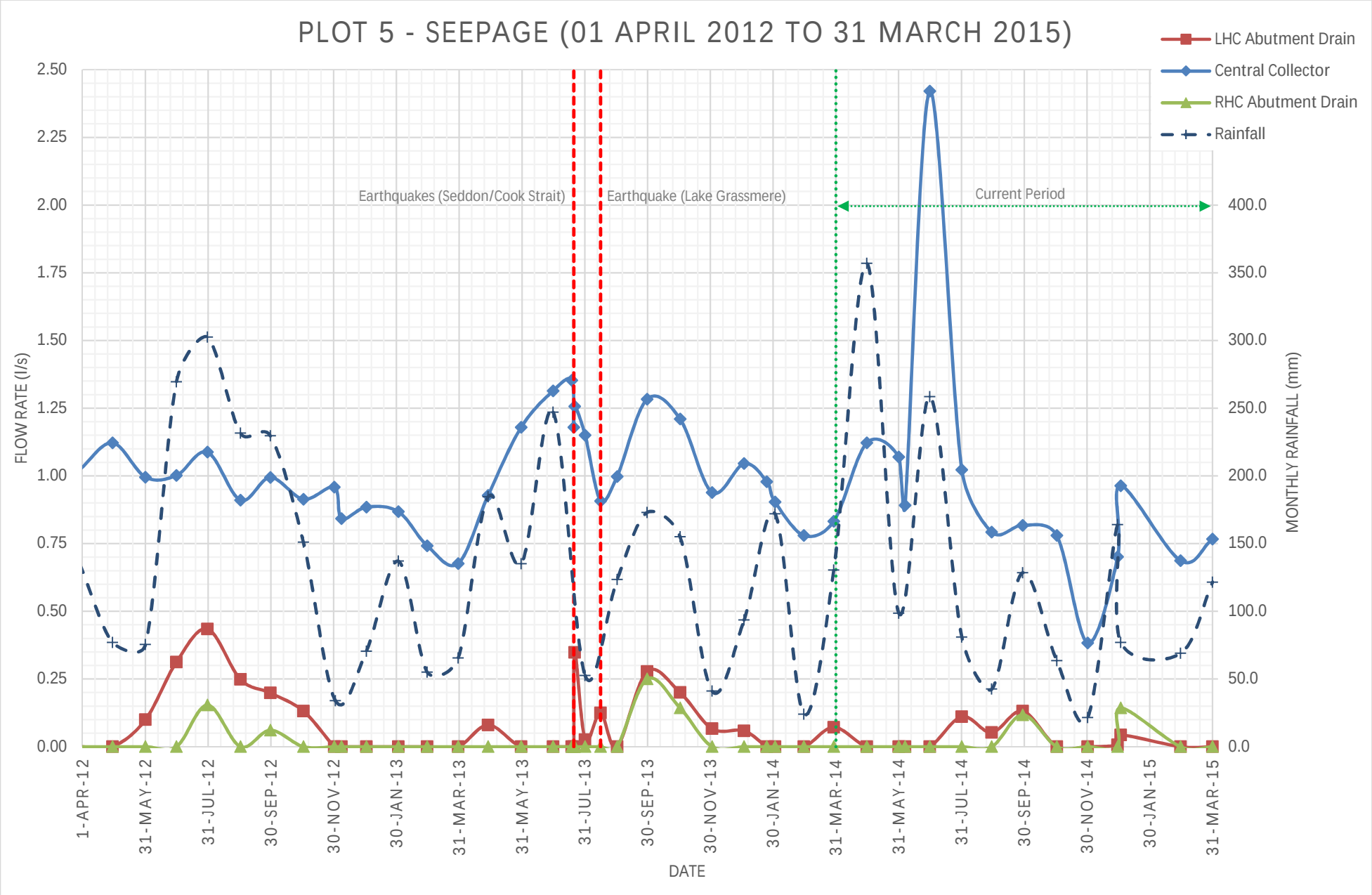
PLOT 5 - SEEPAGE (01 APRIL 2012 TO 31 MARCH 2015)
LHC Abutment Drain
Central Collector
RHC Abutment Drain
Rainfall
Earthquakes (Seddon/Cook Strait)
Earthquake (Lake Grassmere)
Current Period
FLOW RATE (l/s)
MONTHLY RAINFALL (mm)
DATE
2.50
2.25
2.00
1.75
1.50
1.25
1.00
0.75
0.50
0.25
0.00
400.0
350.0
300.0
250.0
200.0
150.0
100.0
50.0
0.0
1-APR-12
31-MAY-12
31-JUL-12
30-SEP-12
30-NOV-12
30-JAN-13
31-MAR-13
31-MAY-13
31-JUL-13
30-SEP-13
30-NOV-13
30-JAN-14
31-MAR-14
31-MAY-14
31-JUL-14
30-SEP-14
30-NOV-14
30-JAN-15
31-MAR-15

Appendix C: Piezometer limits

- Taken from 1998 Safety Review Report

Piezometer Limits

Piezometer	Current Limit (m)	Comments	T&T 1999 Comment
P1	30.00	1.0 m below lake	(2)
P2	28.50	2.5 m below lake	(1)
P3	23.00	8.0 m below lake	(2)
P4	0.00	0.5 m above tip	(2)
P5	-3.50	Sensitive to air in system	(2)
P6	-0.90	0.5 m above tip	(2)
P7	-5.50	Sensitive to air in system	(2)
P8	30.50	0.5 m below lake	(1)
P9	13.50	0.5 m above tip	(1)
P10	31.00	Lake level	(1)
P11	22.50	8.5 m below lake	(1)
P12	8.50	Sensitive to air in system	(1)
P13	13.30	0.5 m above tip	(1)
P14	10.50	0.5 m above tip	(2)
P15	5.00	0.5 m above tip	(1)
P16	28.00	3.0 m below lake	(1)
P17	22.00	9.0 m below lake	(1)
P18	14.00	17.0 m below lake	(1)
P19	13.30	0.5 m above tip	(1)
P20	6.40	0.5 m above tip	(1)
P21	4.50	Sensitive to air in system	(1)
P22	31.00	Lake level	(2)
P23	26.40	0.5 m above tip	(1)
P24	31.00	1.0 m below lake	(1)
P25	26.35	0.5 m above tip	(3)
P26	29.00	No change	(2)
P27	26.60	0.1 m above previous levels	(1)

Notes:

(1) Revised limits based on historical performance and acceptable in terms of design flow net

(2) Original limits retained

(3) P25 accepted as damaged and non-functioning

Appendix D: Diver report

- Commercial Diving Consultants – March 2015 dive report

Commercial
Diving
Consultants Ltd

Mike and Donna Baker
12 Kent Street,
Picton, 7220 New Zealand
E-mail: donna@divecdc.co.nz
Phone: (64) 03 573 8045
Fax: (64) 03 573 8991
Mobile: 027 44 66 725 Donna

MAITAI DAM ANNUAL INSPECTION REPORT
3/4/5TH MARCH 2015

(a) *Check positioning of the intake screens. Adjust as required. Note that as the in-situ winches may not be operable you will need to provide a suitable winch for the duration of this work.*
All screens have been cleaned and repositioned.

(b) *Inspect bolted connections – continue photo/video record. Conduct random tests for tightness of bolts; install lock washers on loose nuts. Photographs to be provided in electronic form, in order of preference. Video to be recorded and supplied on DVD's discs.*
Random testing of the bolts has been carried out at all levels - there were no loose bolts reported.

(c) *A full inspection of flanges at **LEVEL 1**. This level to be identified in the report to facilitate tracking of those levels done. One level to be completed each year. This is in addition to the random check in (b) above.*
All flange bolts checked and found to be tight. There is a small amount of pitting on the horizontal member – this was cleaned and sealed with epoxy.

(d) *Replace any significantly corroded nuts, plus whole bolt if corrosion has affected underlying thread. Use lock washers on all bolts.*
No bolts replaced this survey. There may be bolts & nuts required next survey on Level 3.

(e) *Check integrity of paint coating over entire structure and make good any damage.*
Paint condition is the same as last survey. There are some areas where there is a small amount of pitting with paint loss – this needs checking at the next annual inspection.

(f) *Check tightness and electrical continuity of electrical bonding clamps (30) to all flanges of the tower structure.*
All bonding clamps tight.

(g) *Inspect and report on recent repairs of corroded portions of the structure.*
All repairs area in good condition – no signs of corrosion around them.

(h) *Inspect rock armouring in plunge pool and check and clear debris from flip bucket and check drains clear.*
No change of armouring in plunge pool.
No damage to concrete.
No debris around the flip bucket and drain.

(i) *Provide a written summary of work done and note within this report any significant areas of corrosion and pitting noted on the structure. Also note the number of bolts replaced and estimate number of spare bolts and nuts stocked at the dam.*

Level 2:	May need the pitting inspected and repaired on the dam side member.
Level 3:	Pitting near the leg to be checked next survey
Level 5:	10 small pits cleaned and epoxy filled

* There was no need to replace any bolts this survey
* The quantity of nuts & bolts is the same as in 2013

5x	M20x150mm
17x	M20 x 100mm
38x	M38mm Leg Nuts & Bolts

A 100mm trash pump system was used to remove approximately 250mm of soft mud from the valve chamber roof where it was pumped over towards the spillway – NO CHARGE

Thank you

Regards
Commercial Diving Consultants Ltd

Donna Mobile: 0274 466 725 Email: donna@divecdc.co.nz www.divecdc.co.nz

www.tonkin.co.nz

ENVIRONMENTAL AND ENGINEERING CONSULTANTS